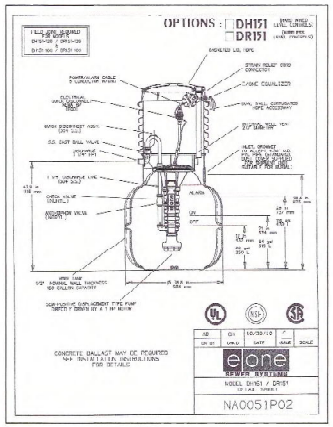

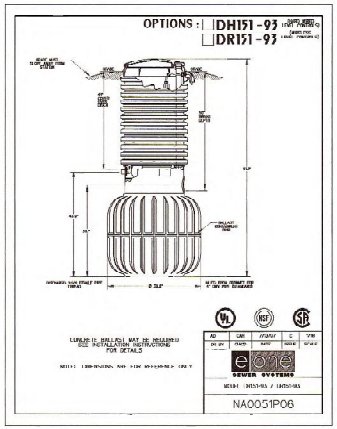

NOTES:
[1] GRINDER PUMP STATION TO BE DH151-93.
[2] POURED IN PLACE CONCRETE BALLAST TO BE 30 IN FROM BOTTOM OF STATION. REFER TO TYPICAL INSTALLATION INSTRUCTIONS FROM MANUFACTURER

GRINDER PUMP STATION
TYPICAL CROSS SECTION
NOT TO SCALE

GRINDER PUMP SPECIFICATIONS

ALL SYSTEM COMPONENTS (310 CMR 15.221)

1. ALL SYSTEM COMPONENTS SHALL BE MARKED WITH MAGNETIC TAPE OR A COMPARABLE MEANS IN ORDER TO LOCATE ONCE BURIED.

PIPE (310 CMR 15.221)

1. BUILDING SEWER: 4-INCH DIA. SCH 40 PVC, MIN. SLOPE 1/4 IN. PER FT.
2. FORCE MAIN: 2-INCH DIA. C. 160 GASKETED JOINT PVC FROM A 1 1/4-INCH DIA. SCH 40 PVC DISCHARGE LINE. THEN TO A 2-INCH DIA. CHECK VALVE TO AN EXISTING 2-INCH DIA. PVC.
3. NO SOLVENT WELDED JOINTS SHALL BE LOCATED UNDER PROPOSED DRIVEWAY.
4. VENT BUILDING SEWER THROUGH MAIN STACK IN BUILDING SERVED BY IT.

GRINDER PUMP STATION (310 CMR 15.221, 15.231, 15.234)

1. MODEL NO. DH151 93. STATION RATED FOR H-10 LOADING. MANUFACTURER: E/ONE SEWER SYSTEMS, KINGSTON, NY, OR EQUAL.
2. DISTRIBUTED BY FR MAHONY & ASSOCIATES, ROCKLAND, MA (781) 982-9300.
3. STATION TYPICALLY DELIVERED IN 2 SECTIONS. CONTRACTOR TO NOTE STATION HEIGHT AND CUT HOLE ACCESSWAY ACCORDINGLY PRIOR TO ASSEMBLING FIELD JOINT.
4. REFER TO INSTALLATION INSTRUCTIONS PROVIDED BY MANUFACTURER FOR COMPLETE INSTRUCTIONS AND SPECIFICATIONS.
5. PERFORM ALL ELECTRICAL WORK IN ACCORDANCE WITH CODE REQUIREMENTS.
6. INSTALL NEMA 3 CONTROL PANEL ENCLOSURE, WITH WALL MOUNT CABINET, INCLUDING THE FOLLOWING:
7. A VISIBLE AND AUDIBLE ALARM TO SIGNAL HIGH WATER, POWERED BY A SEPARATE, DEDICATED CIRCUIT, LOCATED IN THE BUILDING IN SERVICE.
8. INSTALL A REDUNDANT CHECK VALVE ASSEMBLY (E/ONE PART NO. PC0051K0X) BETWEEN THE PUMP DISCHARGE AND THE RIGHT OF WAY PROPERTY BOUNDARY.

SPECIFICATIONS

PIPE

1. LOW PRESSURE SEWER SYSTEM FORCE MAIN: 3 INCH DIA. SCH.40 PVC.
2. LATERAL FORCE MAINS: 1½-INCH DIA. SCH 40 PVC.
3. GRAVITY SEWER LATERAL: 4-INCH DIA. SCH 40 PVC.
4. BED, HAUNCH, AND BACKFILL ALL PIPE IN ACCORDANCE WITH MANUFACTURERS SPECIFICATIONS. ALL JOINTS SHALL BE WATERTIGHT.
5. SOLVENT WELD ALL PVC JOINTS AND PRESSURE TEST ALL PIPES FOR WATER TIGHTNESS PER PIPE MANUFACTURES SPECIFICATION.
6. FORCE MAINS SHALL BE TESTED AT 150% ABOVE MAXIMUM OPERATING PRESSURE OR 150 PSI, WHICHEVER IS GREATER. TESTING SHALL CONFORM TO THE REQUIREMENTS OF THE AMERICAN WATER WORKS ASSOCIATION (AWWA) STANDARD C600. TESTS SHALL BE PERFORMED IN THE PRESENCE OF ENGINEER AND/OR LOCAL APPROVING AUTHORITY ON ALL PRESSURE PIPING PRIOR TO SYSTEM OPERATION.
7. GRAVITY SEWERS AND MANHOLES SHALL BE TESTED BY APPROVED METHODS WHICH WILL ACHIEVE TESTS RESULTS FOR INFILTRATION OR EXFILTRATION OF LESS THAN 100 GALLONS/INCH DIAMETER/MILE/24 HOURS.

FORCE MAIN CLEANOUTS

1. FORCE MAIN CLEANOUTS RATED FOR H-20 LOADING. MANUFACTURER: SHEA CONCRETE PRODUCTS, INC., WILMINGTON, MA (978 658 2645), OR EQUAL.
2. SEAL FORCE MAIN CLEANOUTS WATERTIGHT, USING RUBBER JOINT SEALER AND NON-SHRINK GROUT ALONG ALL JOINTS. A WALK TEST MAY BE REQUIRED.
3. ENTRY MANHOLE SHALL BE BROUGHT TO FINISH GRADE. WATERTIGHT FRAME AND COVER S/E LEBARON LDW328 WITH 3" LETTERS "SEWER"

REGULATORY NOTES:

1. CONTRACTOR SHALL CONTACT DIG-SAFE FOR UNDERGROUND UTILITY MARKING AT 811 AT LEAST 72 HOURS PRIOR TO COMMENCEMENT OF ANY WORK. CONTRACTOR SHALL GIVE TWENTY-FOUR (24)-HOUR NOTICE TO PERTINENT TOWN DEPARTMENTS BEFORE COMMENCING ANY WORK IN THE FIELD.
2. CONTRACTOR SHALL COORDINATE AND OBTAIN ALL CONSTRUCTION PERMITS REQUIRED BY REGULATORY AUTHORITIES.
3. CONTRACTOR SHALL BE AWARE OF ALL CONSTRUCTION REQUIREMENTS, CONDITIONS, AND LIMITATIONS IMPOSED BY PERMITS AND APPROVALS ISSUED BY REGULATORY AUTHORITIES PRIOR TO COMMENCEMENT OF ANY WORK.
4. ALL WORK PERFORMED OR REQUIRED UNDER THIS PLAN SHALL BE MADE FROM THE INNER FACE OF BUILDING FOUNDATION SHALL CONFORM WITH THE UNIFORM STATE PLUMBING CODE OF MASSACHUSETTS, 248 CMR 2.00

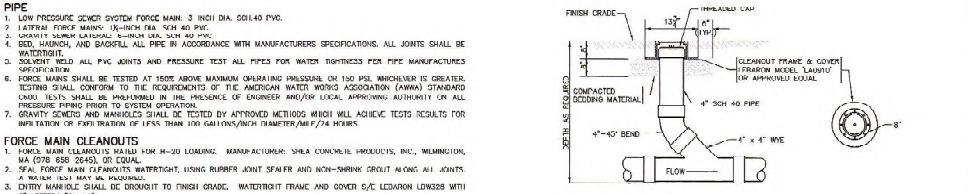

CLEANOUT
TYPICAL CROSS SECTION
NOT TO SCALE

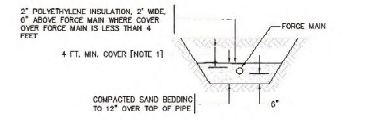

NOTES:
[1] 2.5 FEET MIN. WITH INSULATION.

FORCE MAIN TRENCH
TYPICAL CROSS SECTION
NOT TO SCALE

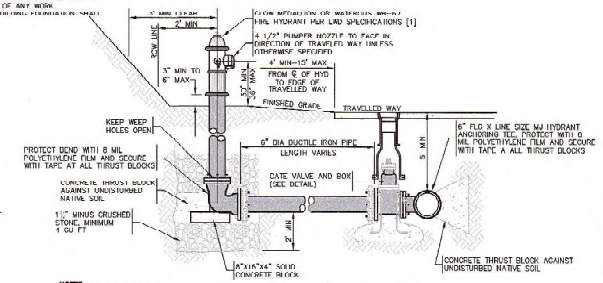

NOTES:
[1] HYDRANT SHALL MEET ALL TOWN AND AWWA STANDARDS AND BE UL/FM APPROVED AND EQUIPPED WITH (1) 4 1/2" PUMPER NOZZLE AND (2) 2 1/2" HOSE NOZZLES.
[2] HYDRANT SHALL OPEN IN DIRECTION AS SPECIFIED BY THE LOCAL FIRE DEPARTMENT.
[3] WHERE HYDRANT IS SHOWN BEHIND SIDEWALK, SET CENTER OF HYDRANT 2-FEET BEHIND SIDEWALK.

FIRE HYDRANT ASSEMBLY
TYPICAL CROSS SECTION
NOT TO SCALE

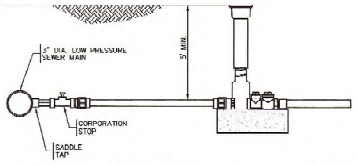

TYPICAL FORCE MAIN LATERAL INSTALLATION
NOT TO SCALE

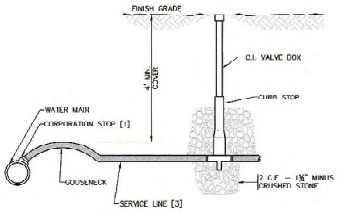

NOTES:
[1] WATER SERVICES LARGER THAN 1" ARE TO BE RESTRAINED TO MAIN WITH APPROVED SADDLE.
[2] COORDINATE BUILDING CONNECTION WITH PLUMBING DRAWINGS.
[3] ALL MATERIALS PER MUNICIPAL STANDARDS.

WATER SERVICE
TYPICAL CROSS SECTION
NOT TO SCALE

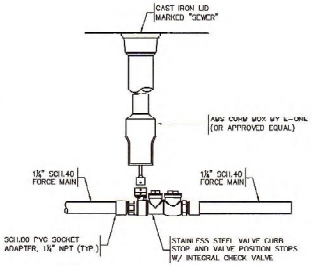

NOTES:
1. INSTALL LATERAL KIT PER L-CNL SPECIFICATIONS.
2. TO ORDER SS LATERAL KIT, USE PART #PC0051S0S. CURB BOX ORDERED SEPARATELY.

LATERAL KIT
NOT TO SCALE

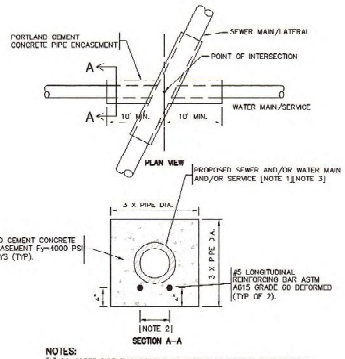

NOTES:
[1] CONCRETE PIPE ENCASEMENT TO EXTEND 10 FT ALONG SEWER LINE AND WATER LINE FROM POINT OF INTERSECTION.
[2] DISTANCE EQUAL TO PIPE DIAMETER.
[3] CONCRETE PIPE ENCASEMENT REQUIRED WHENEVER PROPOSED SEWER MAIN/LATERAL IS WITHIN 10' OF PROPOSED WATER MAIN/SERVICE.

PIPE ENCASEMENT
NOT TO SCALE

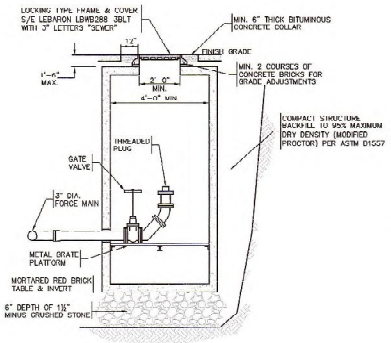

FLUSHING CONNECTION MANHOLE
NOT TO SCALE

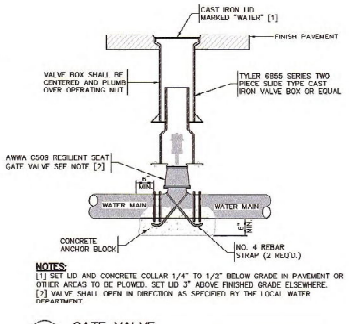

NOTES:
[1] SET LID AND CONCRETE COLLAR 1/4" TO 1/2" BELOW GRADE IN PAVEMENT OR OTHER AREAS TO BE PLOWED. SET LID 3" ABOVE FINISHED GRADE ELSEWHERE.
[2] VALVE SHALL OPEN IN DIRECTION AS SPECIFIED BY THE LOCAL WATER DEPARTMENT.

GATE VALVE
TYPICAL CROSS SECTION
NOT TO SCALE

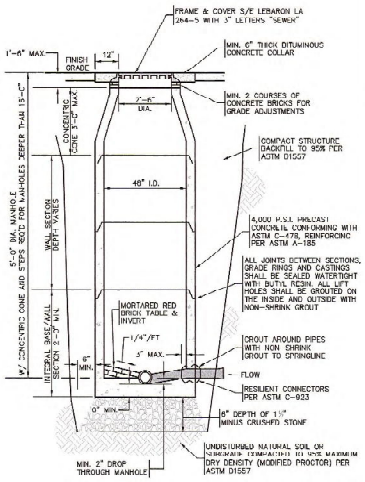

SEWER MANHOLE
TYPICAL CROSS SECTION
NOT TO SCALE

DRAWING ISSUED FOR:

☐ CONCEPT ☐ CONSTRUCTION
■ PERMIT ☐ CONSTRUCTION RECORD

THIS DRAWING MAY NOT SHOW CONSTRUCTION DETAILS AND SPECIFICATIONS FOR ALL PROPOSED IMPROVEMENTS, AND MAY NOT IDENTIFY ALL CONSTRUCTION WORK ITEMS/AREAS OF CONTRACTOR JURISDICTION.

PER 250 CMR 5.02(13), THE FOLLOWING ARE EXCLUDED FROM THE PROFESSIONAL ENGINEER'S RESPONSIBILITY: ALL BOUNDARY INFORMATION, LOCATION OF EXISTING STRUCTURES, TREES, UTILITIES, TOPOGRAPHY OR SIMILAR FEATURES; DESIGN OF RETAINING WALLS, PROPRIETARY EQUIPMENT. SEE EXISTING CONDITION NOTES.

NICHOLAS M. MAULING CIVIL No. 47114 REGISTERED PROFESSIONAL ENGINEER COMMONWEALTH OF MASSACHUSETTS
8/31/2018

NO	DATE	BY	APP.	REVISION DESCRIPTION

GPR Engineering Solutions for Land & Structures

GOLDSMITH, PREST & RINGWALL, INC.
39 MAIN STREET, SUITE 301 ayer, MA 01432
CIVIL ENGINEERING • LAND SURVEYING • LAND PLANNING
VOICE: 978.772.1600 FAX: 978.772.1601
www.gpr.inc.com

DEFINITIVE RESIDENTIAL SUBDIVISION
OPEN SPACE DEVELOPMENT

CONSTRUCTION DETAILS

HEALY CORNER
195 TAHATTAWAN ROAD
LITTLETON, MA

PREPARED FOR:
CLAVEY FAMILY TRUST
P.O. BOX 381
LITTLETON, MA 01460

DES. BY: MCL			
CHK. BY: NMP	DATE: AUGUST 2019	JOB 171088	C9.2