LITTLETON WATER DEPARTMENT

LITTLETON LELWD ELECTRIC LIGHT & WATER DEPARTMENTS

TRUMBULL WELL AND RAW WATER MAIN
TOWN CONTRACT NO. IFB-2024
DWSRF NO. 12397 - CONTRACT NO.1

NICK LAWLER - GENERAL MANAGER
DAVE KETCHEN - ASSISTANT GENERAL MANAGER
COREY GODFREY - WATER SUPERINTENDENT

DRAWING INDEX

SHEET	TITLE
G000	COVER AND SHEET LIST
G001	ABBREVIATIONS, NOTES, AND LEGEND
C101	RAW WATER PLAN WHITCOMB AVENUE
C102	RAW WATER PLAN WHITCOMB AVENUE
C103	RAW WATER PLAN CROSS COUNTRY
C104	ACCESS ROAD GRADING & DRAINAGE PLAN
C105	ACCESS ROAD GRADING & DRAINAGE PLAN
C201	BEAVER BROOK DIRECTIONAL DRILL
C501	DETAILS I
C502	DETAILS II
C503	DETAILS III
C504	DETAILS IV

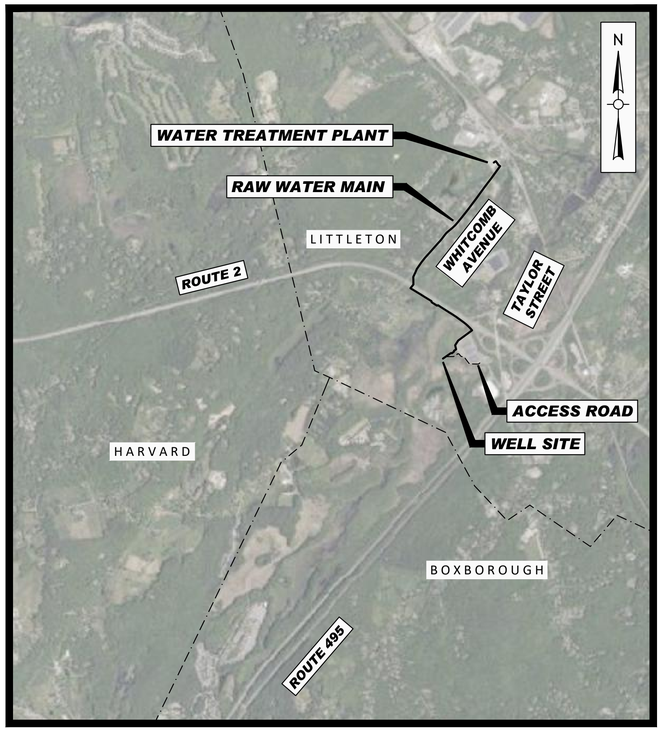

LOCUS MAP
SCALE : 1"=2000'

Weston & Sampson

Weston & Sampson Engineers, Inc.
55 Walkers Brook Drive, Suite 100
Reading, MA 01867
978.532.1900 800.SAMPSON

www.westonandsampson.com

Issued Date:

DECEMBER 2023

Seal:

811 Know what's below. Call before you dig.

Issued For:

PERMIT REVIEW ONLY

FILE NO. ___-__

COPYRIGHT 2023 WESTON & SAMPSON

LEGEND

DESCRIPTION	EXISTING	PROPOSED
SANITARY SEWER	S	S
FORCE MAIN	FM	FM
WATER MAIN	W	W
TEMPORARY WATER		TW
STORM DRAIN	D	D
GAS	G	G
ELECTRIC	E	E
OVERHEAD WIRE	OHW	OHW
TELEPHONE	T	T
CABLE TELEVISION	CATV	CATV
GRINDER PUMP		GP
SANITARY SEWER MANHOLE	S	SMH
STORM DRAIN MANHOLE	D	DMH
ELECTRICAL MANHOLE	E	EMH
TELEPHONE MANHOLE	T	TMH
AIR RELEASE VALVE MANHOLE		ARMH
FORCE MAIN CLEANOUT MANHOLE		FMCO
CLEANOUT		CO
CATCH BASIN		CB
HYDRANT		
TEMPORARY HYDRANT		H
GATE VALVE	WV	
CHECK VALVE		
CURB STOP		
BUTTERFLY VALVE		
BALL VALVE		
REDUCER		
CAP OR PLUG		
GAS GATE VALVE	GV	
UTILITY POLE		
GUY POLE		
LIGHT POST		
EDGE OF PAVEMENT		
EDGE OF UNPAVED ROAD		
CURB		
SIDEWALK		
STONE WALL		
RETAINING WALL	RET WALL	RET WALL
FENCE	X	X
GUARD RAIL		
DECIDUOUS TREE		
CONIFEROUS TREE		
TREE LINE		
STONE BOUND		
PROPERTY LINE		
EASEMENT LINE		
LIMIT OF WORK		
APPROX. LIMIT OF REFUSE		
SPOT ELEVATIONS	x100.5	x100.5
CONTOUR LINES	56	56
HOUSE NUMBER	#35	
FLOOR ELEVATION	FL=56.7	
SILL ELEVATION	S=56.7	
WETLAND FLAGS	WF-7 WF-8	
100-FT WETLAND BUFFER		
FEMA 100-YR FLOOD PLAIN		
CRUSHED STONE / RIP-RAP		
CRUSHED STONE INFILTRATION TRENCH		
DRAINAGE DITCH / SWALE		
STATION NUMBERING	10	10
GUARD POST		
BOLLARD	B	
SIGN		
BENCH MARK		
PERCOLATION TEST	PT 1	PT-1
TEST PIT	TP 1	TP-1
BORING	B-1	B-1
PROBE	P-1	P-1
GROUNDWATER MONITORING WELL	WS-1	WS-1
GAS MONITORING WELL	GMW-1	GMW-1
WATER WELL / OBSERVATION WELL	W	
GAS VENT	GV	GV
COMPOST FILTER TUBE		
COMPOST FILTER TUBE & SILT FENCE		X X
CATCH BASIN FILTER BAG		
ROCK OUTCROP		

NOTE: ITEMS SHOWN IN THE LEGEND MAY NOT BE PRESENT IN THESE PLANS

ABBREVIATIONS

AC	ASBESTOS CEMENT PIPE
ACCMP	ASPHALT COATED CORRUGATED METAL PIPE
ARV	AIR RELEASE VALVE
ASTM	ASTM INTERNATIONAL
BC	BITUMINOUS CONCRETE
BIT	BITUMINOUS
BLDG	BUILDING
BM	BENCH MARK
BO	BLOW OFF
BV	BUTTERFLY VALVE
CATV	CABLE TELEVISION
CB	CATCH BASIN
CC	CONCRETE CURB
CI	CAST IRON
℄	CENTERLINE
CL	CEMENT LINED
CMP	CORRUGATED METAL PIPE
CONC	CONCRETE
CU FT	CUBIC FEET
CY	CUBIC YARD
D	STORM DRAIN, DEPTH FROM RIM TO INVERT
DI	DROP INLET, DUCTILE IRON
DIA	DIAMETER
DMH	DRAIN MANHOLE
DWG	DRAWING
E	EAST, ELECTRIC
EA	EACH
EF	EACH FACE
ELEV	ELEVATION
EOP	EDGE OF PAVEMENT
EW	EACH WAY
EXIST	EXISTING
FLG	FLANGE
FT	FEET, FOOT
G	NATURAL GAS
GALV	GALVANIZED
GC	GRANITE CURB
GR	GRANITE
HC	HOUSE CONNECTION
HORIZ	HORIZONTAL
HP	HIGH PRESSURE
HYD	FIRE HYDRANT
I	INVERT
INV	INVERT
ID	INSIDE DIAMETER
IP	IRON PIPE
LB	POUND
LF	LINEAR FEET
LS	LUMP SUM
MAX	MAXIMUM
MB	MAIL BOX
MECH	MECHANICAL
MH	MANHOLE
MassDOT	MASSACHUSETTS DEPARTMENT OF TRANSPORTATION
MIN	MINIMUM
MISC	MISCELLANEOUS
MJ	MECHANICAL JOINT
MWRA	MASSACHUSETTS WATER RESOURCES AUTHORITY
N	NORTH
NE	NORTH EAST
NW	NORTH WEST
NF	NOT FOUND
NO OR #	NUMBER
OD	OUTSIDE DIAMETER
PCCP	PRESTRESSED CONCRETE CYLINDER PIPE
PE	PLAIN END, POLYETHYLENE
ℓ	PROPERTY LINE
PL	PLATE
PVC	POLYVINYL CHLORIDE
PVCO	MOLECULARLY ORIENTED POLYVINYL CHLORIDE
PVMT	PAVEMENT
RCP	REINFORCED CONCRETE PIPE
ROW	RIGHT-OF-WAY
RQD	ROCK QUALITY
S	SEWER, SOUTH
SE	SOUTH EAST
SECT	SECTION
SF	SQUARE FEET
SHT	SHEET
SPEC	SPECIFICATIONS
SQ FT	SQUARE FEET
SS	SEWER SERVICE, STAINLESS STEEL
STA	STATION
STL	STEEL
SW	SIDEWALK, SOUTH WEST
T	HYDROSTATIC THRUST, TELEPHONE
TBM	TEMPORARY BENCH MARK
THK	THICK (NESS)
TYP	TYPICAL
UP	UTILITY POLE
VC	VITRIFIED CLAY
VERT	VERTICAL
W	WATER, WEST
W/	WITH
W/O	WITHOUT

CONSTRUCTION NOTES

1. THE CONTRACTOR SHALL CALL DIGSAFE AT 1-888-344-7233 AND CITY/TOWN DEPARTMENTS AS APPROPRIATE AT LEAST 72 HOURS, SATURDAYS, SUNDAYS, AND HOLIDAYS EXCLUDED, PRIOR TO EXCAVATING AT ANY LOCATION. A COPY OF THE DIGSAFE PROJECT REFERENCE NUMBER(S) SHALL BE GIVEN TO THE OWNER PRIOR TO EXCAVATION.

2. LOCATIONS OF EXISTING PIPES, CONDUITS, UTILITIES, FOUNDATIONS AND OTHER UNDERGROUND OBJECTS ARE NOT WARRANTED TO BE CORRECT AND THE CONTRACTOR SHALL HAVE NO CLAIM ON THAT ACCOUNT SHOULD THEY BE OTHER THAN SHOWN.

3. TEST PITS TO LOCATE EXISTING UTILITIES MAY BE ORDERED BY THE ENGINEER TO DETERMINE WHETHER TO RAISE OR LOWER THE PROPOSED WATER MAIN TO CLEAR EXISTING UTILITIES OR VERIFY EXISTING UTILITY LOCATION, SIZE AND TYPE.

4. STONE WALLS, FENCES, MAIL BOXES, SIGNS, CURBS, LIGHT POLES, ETC. SHALL BE REMOVED AS NECESSARY TO PERFORM THE WORK AND REPLACED TO A CONDITION AT LEAST EQUAL TO THAT BEFORE CONSTRUCTION BEGAN. UNLESS OTHERWISE INDICATED, ALL SUCH WORK SHALL BE INCIDENTAL TO CONSTRUCTION OF THE PROJECT.

5. ALL PAVEMENT DISTURBED BY THE CONTRACTOR'S OPERATIONS SHALL BE REPLACED IN ACCORDANCE WITH THE SPECIFICATIONS AND AS SHOWN ON THE DRAWINGS.

6. ALL AREAS DISTURBED BY THE CONTRACTOR BEYOND PAYMENT LIMITS SHALL BE RESTORED AT NO ADDITIONAL COST TO THE OWNER.

7. UNLESS OTHERWISE INDICATED, CONCRETE USED FOR PIPE ANCHOR BLOCKS, BACKING, PIPE CRADLES, ARCHES, AND FILL SHALL HAVE A MINIMUM COMPRESSIVE STRENGTH OF 3000 PSI AT 28 DAYS.

8. APPROVED JOINT RESTRAINT METHODS SHALL BE PROVIDED FOR WATER MAINS WHERE ANY BENDS, TEES, PLUGS, OR WYES ARE INSTALLED. CONCRETE THRUST BLOCKS, ANCHOR BLOCKS AND TIE RODS MAY BE USED FOR 6-INCH AND 8-INCH PIPE WHERE JOINT RESTRAINT IS NOT FEASIBLE UPON APPROVAL OF THE ENGINEER. SEE TABLE 1 DETAIL FOR REQUIRED RESTRAINING LENGTHS AND SPECIFICATIONS FOR ADDITIONAL INFORMATION.

9. THE CONTRACTOR SHALL NOT STORE ANY APPARATUS, MATERIALS, SUPPLIES, OR EQUIPMENT ON DRAINAGE STRUCTURES OR WITHIN 100 FEET OF WETLANDS.

10. NEW WATER MAINS AND SERVICES SHALL BE INSTALLED AT THE MINIMUM DEPTH FROM FINISH GRADE TO TOP OF PIPE AS SHOWN ON THE DRAWINGS. WHERE NECESSARY, NEW WATER MAINS SHALL BE INSTALLED AT A GREATER DEPTH TO CLEAR OBSTACLES SHOWN ON THE DRAWINGS AT NO ADDITIONAL COST TO THE OWNER. MINIMUM CLEARANCES TO UTILITIES, AS SHOWN ON THE DRAWINGS SHALL BE MAINTAINED.

11. EXISTING SERVICES SHALL NOT BE CONNECTED TO THE PROPOSED WATER MAIN UNTIL THAT MAIN HAS PASSED PRESSURE TEST AND DISINFECTION REQUIREMENTS.

12. EXISTING WATER MAINS OR SERVICES SHALL NOT BE ABANDONED WITHOUT THE APPROVAL OF THE OWNER. WATER SERVICE SHALL NOT BE INTERRUPTED MORE THAN 4 HOURS WITHOUT PRIOR APPROVAL OF THE OWNER.

13. ALL HYDRANTS REMOVED SHALL BE SALVAGED AND DELIVERED TO A LOCATION TO BE DETERMINED BY THE OWNER. SURFACE RESTORATION SHALL BE IN KIND UNLESS OTHERWISE NOTED.

14. ANY HYDRANT WHICH IS NOT IN SERVICE SHALL BE COVERED WITH A SECURELY FASTENED AND APPROVED BAG.

15. THE LOCATION OF PIPES, CAPS, REDUCERS, BENDS, AND OTHER FITTINGS AT POINTS OF CONNECTIONS TO EXISTING MAINS IS APPROXIMATE. CONTRACTOR SHALL DIG A TEST PIT AT EACH LOCATION TO DETERMINE THE DIAMETER AND MATERIAL OF THE EXISTING PIPE AND THE LOCATION OF THE TIE-IN POINT.

16. ALL CATCH BASINS WITHIN PROJECT LIMITS SHALL BE PROTECTED AS SHOWN ON DETAIL SHEET.

17. THE CONTRACTOR SHALL NOTIFY THE MassDOT DISTRICT PERMITS ENGINEER AT 857-368-3000 TWO (2) DAYS PRIOR TO THE START OF WORK IN A STATE ROADWAY.

18. ALL STREET EXCAVATIONS SHALL BE COMPLETELY CLOSED AT THE END OF EACH WORKING DAY BY BACKFILLING. COVERING WITH STEEL PLATES MAY BE ALLOWED IF APPROVED BY THE ENGINEER.

19. THE CONTRACTOR SHALL COMPLY WITH ALL REQUIREMENTS OF MASSACHUSETTS GENERAL LAW CHAPTER 82A, TRENCH EXCAVATION AND SAFETY REQUIREMENTS, TO PREVENT THE GENERAL PUBLIC FROM UNAUTHORIZED ACCESS TO UNATTENDED TRENCHES.

20. THE CONTRACTOR SHALL NOT OPEN OR CLOSE ANY VALVES WHICH HOLD WATER IN THE SYSTEM. THE OWNER WILL, ON 72 HOURS NOTICE FROM THE CONTRACTOR, OPEN AND/OR CLOSE ANY VALVES REQUIRED FOR DRAINING OR ADMITTING WATER TO THE VARIOUS SECTIONS OF THE WATER MAINS. THE CONTRACTOR IS RESPONSIBLE TO NOTIFY IN WRITING 48 HOURS IN ADVANCE, ANY OCCUPANT THAT WILL BE WITHOUT WATER DUE TO A SHUTDOWN.

21. SOME WATER SERVICE CONNECTIONS MAY NOT BE SHOWN ON THE DRAWINGS. THE OWNER WILL MARK THE LOCATION OF SUCH CONNECTIONS, PROVIDED THE CONTRACTOR GIVES THE OWNER AT LEAST 72 HOURS ADVANCE NOTICE.

22. ALL NEW WATER SERVICES SHALL BE THE SAME SIZE AS THE EXISTING WATER SERVICE, EXCEPT THAT NO SERVICE SHALL BE LESS THAN 1" DIAMETER. COORDINATE THIS WORK WITH THE WATER DEPARTMENT.

23. ELEVATIONS REFERENCED ARE NAD83 MASSACHUSETTS STATE PLANES, MAINLAND ZONE, US FOOT.

24. EXISTING UTILITY INFORMATION, TOPOGRAPHIC INFORMATION, EDGE OF PAVEMENT, UTILITY POLE LOCATIONS, AND LOCATIONS OF EXISTING ABOVE GROUND STRUCTURES WERE TAKEN FROM PLANS PREPARED BY BEALS AND THOMAS, INC., KELLY ENGINEERING GROUP, GIS DATA, AND GROUND SURVEY CONDUCTED BY WESTON & SAMPSON.

25. ASSESSORS INFORMATION REPRESENTED ON THESE DRAWINGS IS TAKEN FROM THE CITY/TOWN ASSESSOR'S PARCEL MAPS, MASS GIS DATA AND IS INCLUDED FOR ILLUSTRATIVE PURPOSES ONLY. ASSESSORS INFORMATION IS NOT INTENDED TO BE AN AUTHORITATIVE RECORD OF PROPERTY BOUNDARIES OR A SOURCE OF INFORMATION FOR AN ACTUAL SURVEY OR LEGAL DESCRIPTION OF THE PROPERTY. NO WORK HAS BEEN PERFORMED TO DETERMINE THE DEPICTED PROPERTY LINES AND THEREFORE, THESE DRAWINGS ARE NOT INTENDED BE USED TO DELINEATE ANY EXISTING OR PROPOSED STRUCTURES, FEATURES OR BOUNDARIES RELATIVE TO PROPERTY LINES. AUTHORITATIVE RECORDS OF PROPERTY LINES MAY BE LOCATED AT THE STATE OR MUNICIPAL AGENCY RESPONSIBLE FOR MAINTAINING PUBLIC RECORDS IN WHICH THE PARCEL IS LOCATED. LEGALLY AUTHORITATIVE MAPS OF PROPERTY LINES MAY ONLY BE PRODUCED BY A PROFESSIONAL LAND SURVEYOR.

Project:

LITTLETON WATER DEPARTMENT

LITTLETON LELWD ELECTRIC LIGHT & WATER DEPARTMENTS

TAYLOR STREET WELL AND RAW WATER MAIN
TOWN CONTRACT NO. IFB-2024
DWSRF NO. 12397
CONTRACT NO.1

Weston & Sampson

Weston & Sampson Engineers, Inc.
55 Walkers Brook Drive, Suite 100
Reading, MA 01867
978.532.1900 800.SAMPSON
www.westonandsampson.com

Consultants:

Revisions:

No.	Date	Description

COA:

Seal:

Issued For:

PERMITTING

Scale: AS NOTED

Date:	DECEMBER 2023
Drawn By:	GJK/RWS
Reviewed By:	SBR
Approved By:	TEM
W&S Project No.:	ENG23-0679
W&S File No.:	

Drawing Title:

ABBREVIATIONS, NOTES, & LEGEND

Sheet Number:

G001

COPYRIGHT © 2022 WESTON & SAMPSON, INC.

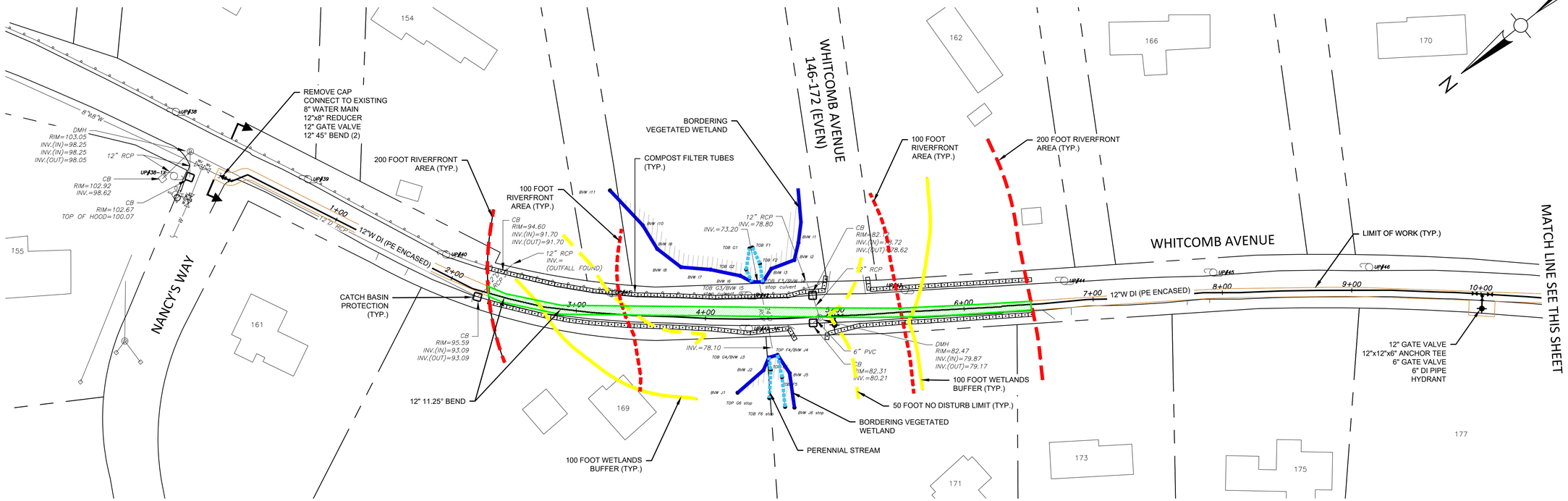

PLAN
SCALE: 1" = 40'

NOTES:

1. WETLAND DELINEATION CONDUCTED ON DECEMBER 5,6, AND 21, JANUARY 5 AND 18, 2023, AND AUGUST 17, 2023 BY DEVIN HERRICK, CWS.
2. ENTIRE PLAN VIEW IS WITHIN LITTLETON GIS AQUIFER ZONING OVERLAY DISTRICT.

LEGEND:

- BORDERING VEGETATED WETLANDS
- BANK/LAND UNDER WATER
- 100 FOOT WETLANDS BUFFER
- 50 FOOT NO DISTURB LIMIT
- 100 YEAR FLOOD ZONE
- 200 FOOT RIVERFRONT AREA
- 100 FOOT RIVERFRONT AREA
- LIMIT OF WORK
- RIVERFRONT AREA TEMPORARY IMPACT

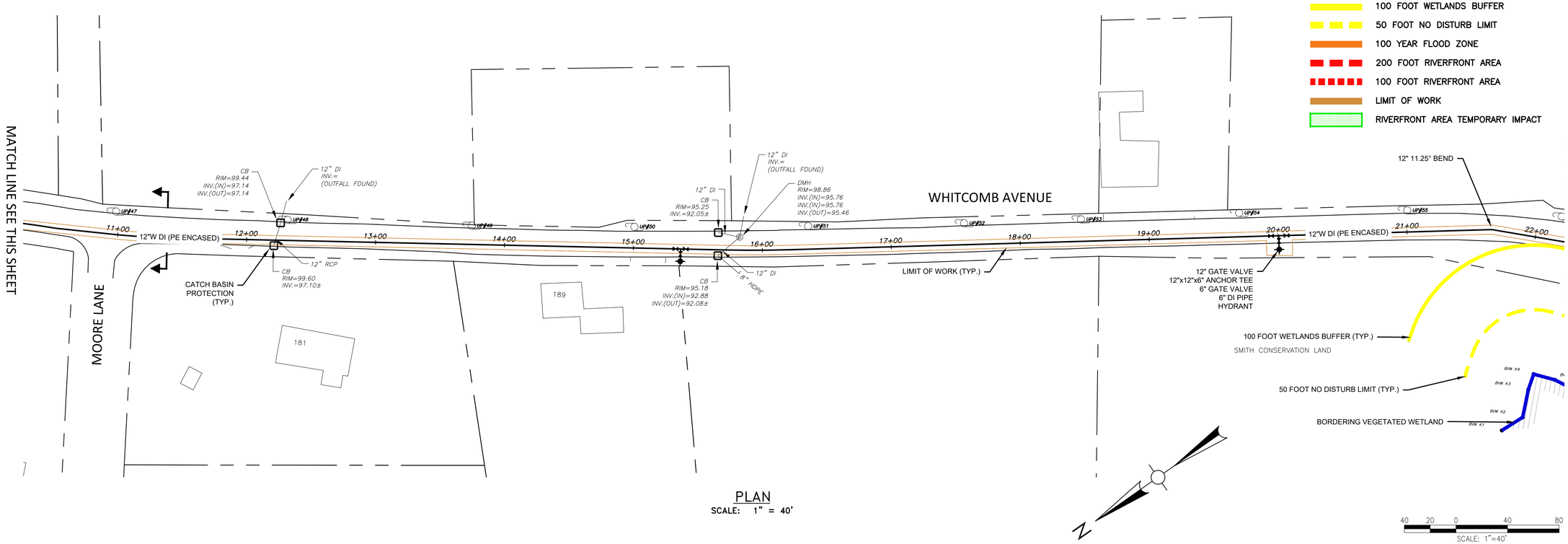

PLAN
SCALE: 1" = 40'

SCALE: 1"=40'

Project:
LITTLETON WATER DEPARTMENT
LITTLETON LELWD ELECTRIC LIGHT & WATER DEPARTMENTS
WATER SUPPLY FROM LITTLETON TO BOXBOROUGH
TOWN CONTRACT NO. IFB-2024
DWSRF NO. 12397
CONTRACT NO. 2

Weston & Sampson
Weston & Sampson Engineers, Inc.
55 Walkers Brook Drive, Suite 100
Reading, MA 01867
978.532.1900 800.SAMPSON
www.westonandsampson.com

Consultants:

Revisions:

No.	Date	Description

COA:

Seal:

Issued For: PERMITTING

Scale: AS NOTED

Date:	DECEMBER 2023
Drawn By:	GJK/RWS
Reviewed By:	SBR
Approved By:	TEM
W&S Project No.:	ENG23-0679
W&S File No.:	

Drawing Title: FINISH WATER PLAN WHITCOMB AVENUE

Sheet Number: C101

COPYRIGHT © 2022 WESTON & SAMPSON, INC.

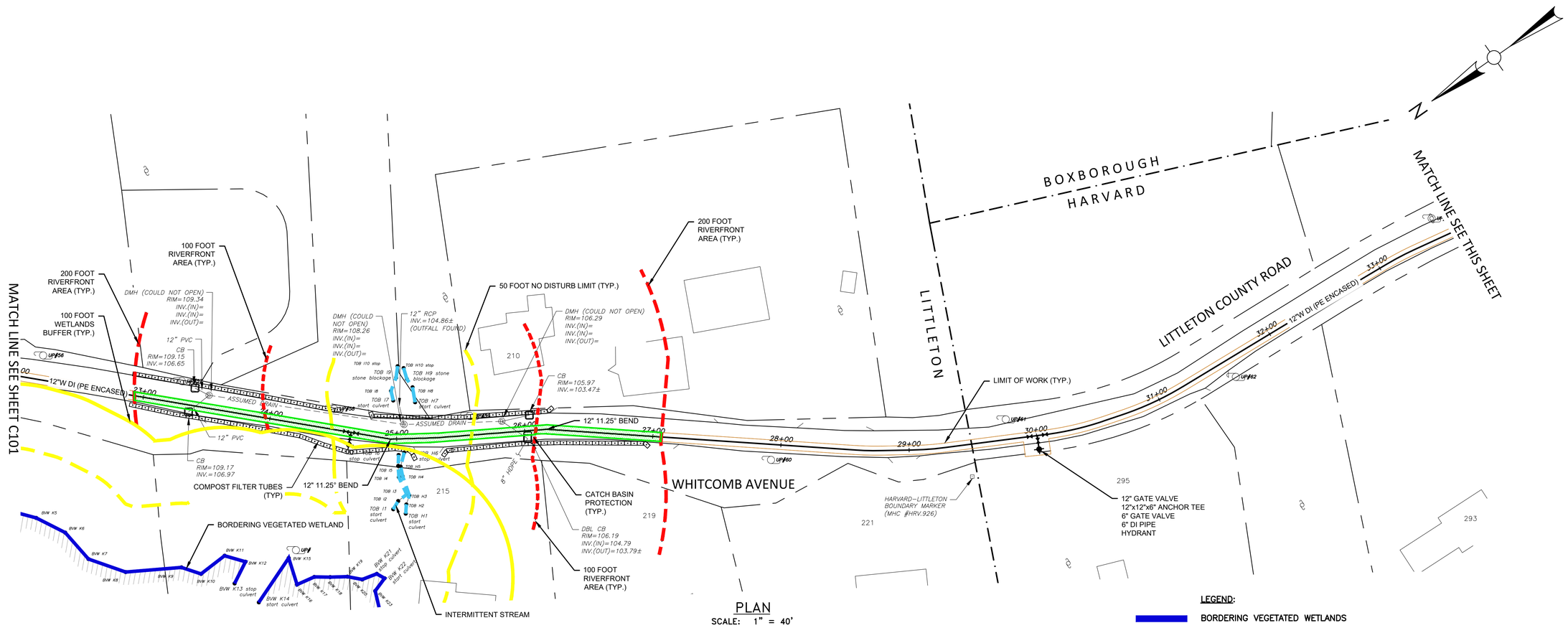

PLAN

SCALE: 1" = 40'

LEGEND:

- BORDERING VEGETATED WETLANDS
- BANK/LAND UNDER WATER
- 100 FOOT WETLANDS BUFFER
- 50 FOOT NO DISTURB LIMIT
- 100 YEAR FLOOD ZONE
- 200 FOOT RIVERFRONT AREA
- 100 FOOT RIVERFRONT AREA
- LIMIT OF WORK
- RIVERFRONT AREA TEMPORARY IMPACT

NOTES:

1. WETLAND DELINEATION CONDUCTED ON DECEMBER 5,6, AND 21, JANUARY 5 AND 18, 2023, AND AUGUST 17, 2023 BY DEVIN HERRICK, CWS.
2. ENTIRE PLAN VIEW IS WITHIN LITTLETON GIS AQUIFER ZONING OVERLAY DISTRICT.

Project:

LITTLETON WATER DEPARTMENT

LITTLETON LELWD ELECTRIC LIGHT & WATER DEPARTMENTS

WATER SUPPLY FROM LITTLETON TO BOXBOROUGH
TOWN CONTRACT NO. IFB-2024
DWSRF NO. 12397
CONTRACT NO. 2

Weston & Sampson

Weston & Sampson Engineers, Inc.
55 Walkers Brook Drive, Suite 100
Reading, MA 01867
978.532.1900 800.SAMPSON
www.westonandsampson.com

Consultants:

Revisions:

No.	Date	Description

COA:

Seal:

Issued For: PERMITTING

Scale: AS NOTED

Date: DECEMBER 2023
Drawn By: GJK/RWS
Reviewed By: SBR
Approved By: TEM
W&S Project No.: ENG23-0679
W&S File No.:

Drawing Title: FINISH WATER PLAN WHITCOMB AVENUE AND LITTLETON COUNTY ROAD

Sheet Number: C102

COPYRIGHT © 2022 WESTON & SAMPSON, INC.

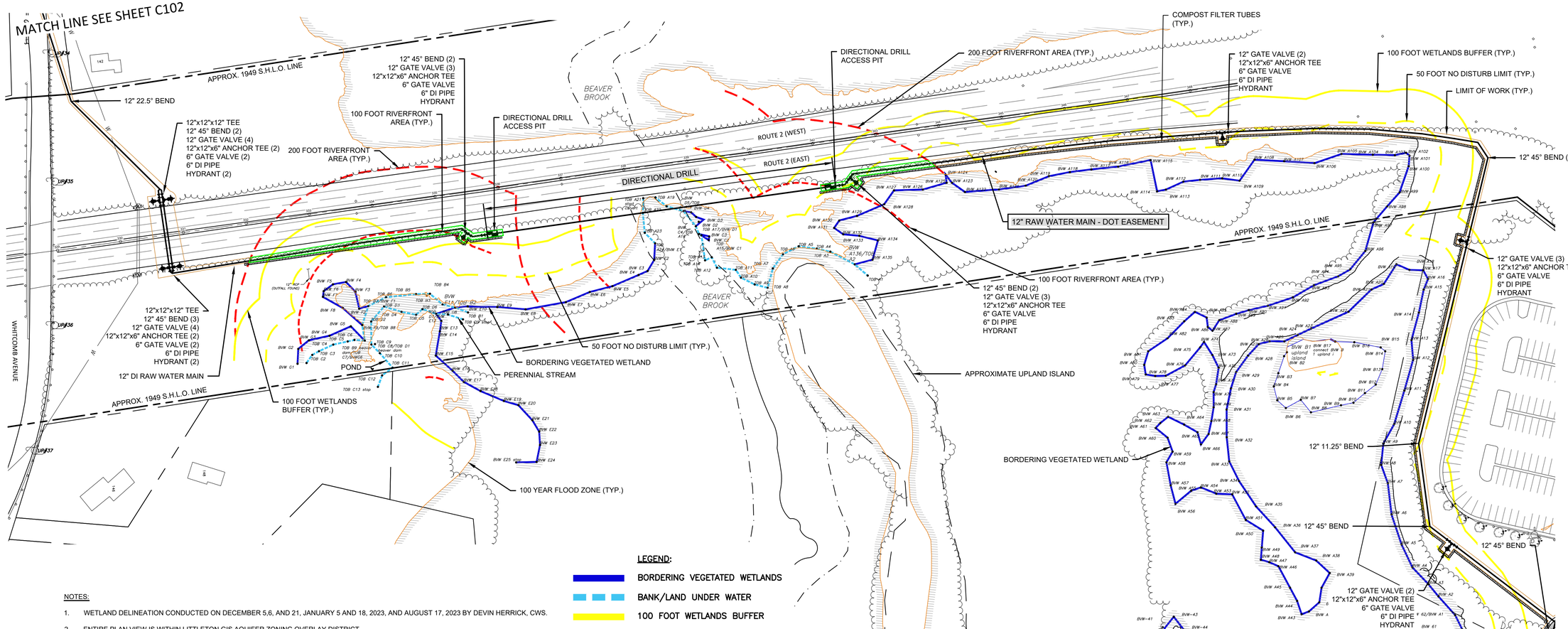

NOTES:

1. WETLAND DELINEATION CONDUCTED ON DECEMBER 5,6, AND 21, JANUARY 5 AND 18, 2023, AND AUGUST 17, 2023 BY DEVIN HERRICK, CWS.
2. ENTIRE PLAN VIEW IS WITHIN LITTLETON GIS AQUIFER ZONING OVERLAY DISTRICT.

LEGEND:

- BORDERING VEGETATED WETLANDS
- BANK/LAND UNDER WATER
- 100 FOOT WETLANDS BUFFER
- 50 FOOT NO DISTURB LIMIT
- 100 YEAR FLOOD ZONE
- 200 FOOT RIVERFRONT AREA
- 100 FOOT RIVERFRONT AREA
- LIMIT OF WORK
- RIVERFRONT AREA TEMPORARY IMPACT
- BLSF PERMANENT IMPACT

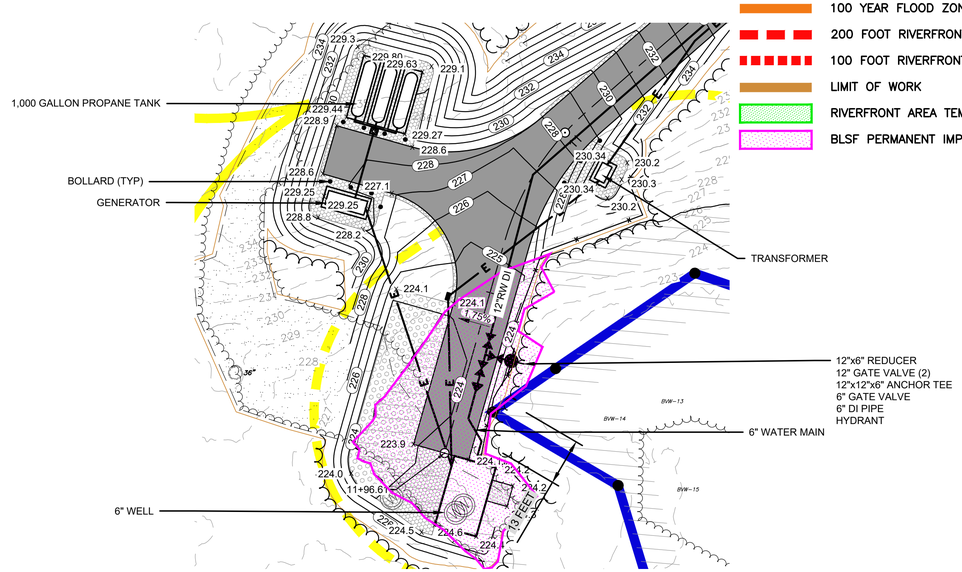

WELL SITE PLAN

SCALE: 1"=20'

20 10 0 20 40

SCALE: 1"=20'

Project:

LITTLETON WATER DEPARTMENT

LITTLETON LELWD ELECTRIC LIGHT & WATER DEPARTMENTS

TAYLOR STREET WELL AND RAW WATER MAIN
TOWN CONTRACT NO. IFB-2024
DWSRF NO. 12397
CONTRACT NO.1

Weston & Sampson

Weston & Sampson Engineers, Inc.
55 Walkers Brook Drive, Suite 100
Reading, MA 01867
978.532.1900 800.SAMPSON
www.westonandsampson.com

Consultants:

Revisions:

No.	Date	Description

COA:

Seal:

Issued For:

PERMITTING

Scale: AS NOTED

Date:	DECEMBER 2023
Drawn By:	GJK/RWS
Reviewed By:	SBR
Approved By:	TEM
W&S Project No.:	ENG23-0679
W&S File No.:	

Drawing Title:

RAW WATER PLAN
CROSS COUNTRY

Sheet Number:

C103

COPYRIGHT © 2022 WESTON & SAMPSON, INC.

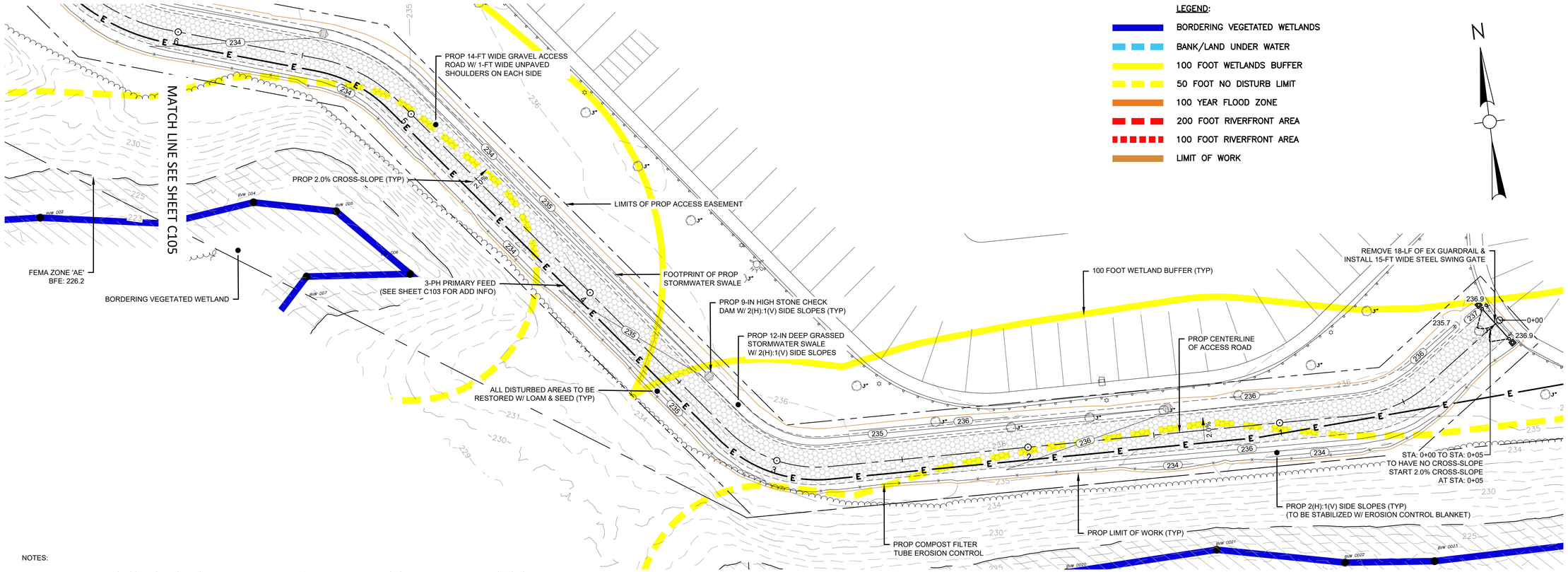

NOTES:

1. WETLAND DELINEATION CONDUCTED ON DECEMBER 5,6, AND 21, JANUARY 5 AND 18, 2023, AND AUGUST 17, 2023 BY DEVIN HERRICK, CWS.
2. ENTIRE PLAN VIEW IS WITHIN LITTLETON GIS AQUIFER ZONING OVERLAY DISTRICT.

PLAN

SCALE: 1" = 20'

20 10 0 20 40

SCALE: 1"=20'

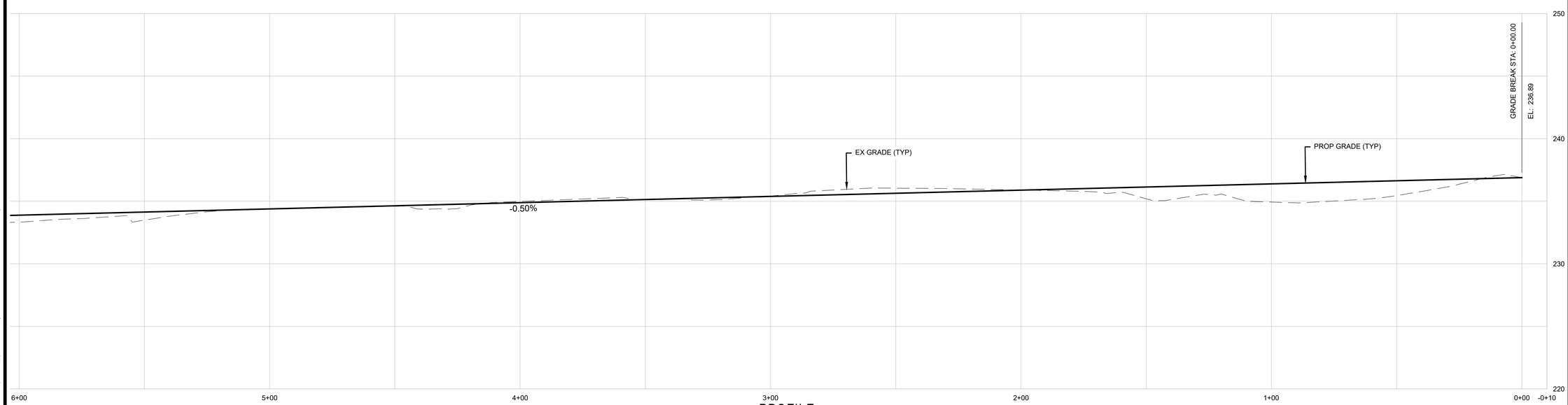

PROFILE

SCALE: 1"=20' HORIZ
1"=4' VERT

20 10 0 20 40

4 2 0 4 8

HORIZONTAL SCALE: 1"=20'
VERTICAL SCALE: 1"=4'

Project:

LITTLETON WATER DEPARTMENT

LITTLETON LELWD ELECTRIC LIGHT & WATER DEPARTMENTS

TAYLOR STREET WELL AND RAW WATER MAIN
TOWN CONTRACT NO. IFB-2024
DWSRF NO. 12397
CONTRACT NO.1

Weston & Sampson

Weston & Sampson Engineers, Inc.
55 Walkers Brook Drive, Suite 100
Reading, MA 01867
978.532.1900 800.SAMPSON
www.westonandsampson.com

Consultants:

Revisions:

No.	Date	Description

COA:

Seal:

Issued For:

PERMITTING

Scale: AS NOTED

Date:	DECEMBER 2023
Drawn By:	GJK/RWS
Reviewed By:	SBR
Approved By:	TEM
W&S Project No.:	ENG23-0679
W&S File No.:	

Drawing Title:

ACCESS ROAD GRADING & DRAINAGE PLAN

Sheet Number:

C104

COPYRIGHT © 2022 WESTON & SAMPSON, INC.

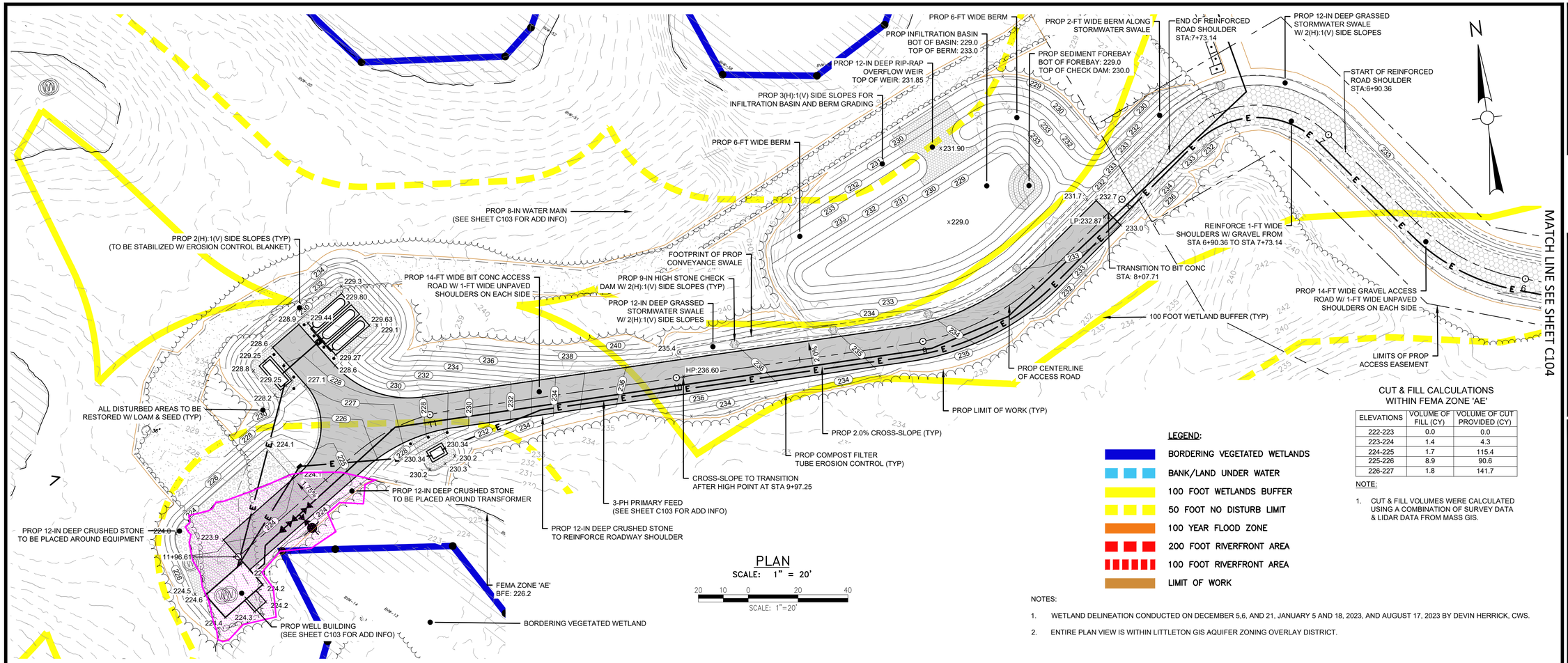

PLAN

SCALE: 1" = 20'

20 10 0 20 40

SCALE: 1"=20'

CUT & FILL CALCULATIONS WITHIN FEMA ZONE 'AE'

ELEVATIONS	VOLUME OF FILL (CY)	VOLUME OF CUT PROVIDED (CY)
222-223	0.0	0.0
223-224	1.4	4.3
224-225	1.7	115.4
225-226	8.9	90.6
226-227	1.8	141.7

NOTE:

1. CUT & FILL VOLUMES WERE CALCULATED USING A COMBINATION OF SURVEY DATA & LIDAR DATA FROM MASS GIS.

LEGEND:

- BORDERING VEGETATED WETLANDS
- BANK/LAND UNDER WATER
- 100 FOOT WETLANDS BUFFER
- 50 FOOT NO DISTURB LIMIT
- 100 YEAR FLOOD ZONE
- 200 FOOT RIVERFRONT AREA
- 100 FOOT RIVERFRONT AREA
- LIMIT OF WORK

NOTES:

1. WETLAND DELINEATION CONDUCTED ON DECEMBER 5,6, AND 21, JANUARY 5 AND 18, 2023, AND AUGUST 17, 2023 BY DEVIN HERRICK, CWS.
2. ENTIRE PLAN VIEW IS WITHIN LITTLETON GIS AQUIFER ZONING OVERLAY DISTRICT.

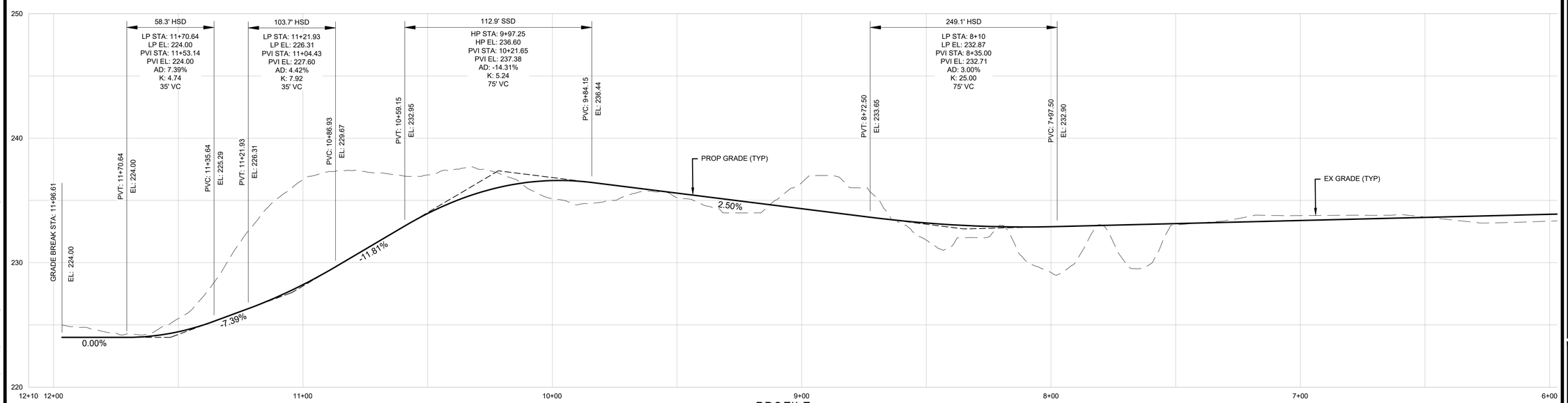

PROFILE

SCALE: 1"=20' HORIZ
1"=4' VERT

20 10 0 20 40

4 2 0 4 8

HORIZONTAL SCALE: 1"=20'
VERTICAL SCALE: 1"=4'

Project:

LITTLETON WATER DEPARTMENT

LITTLETON LELWD ELECTRIC LIGHT & WATER DEPARTMENTS

TAYLOR STREET WELL AND RAW WATER MAIN
TOWN CONTRACT NO. IFB-2024
DWSRF NO. 12397
CONTRACT NO.1

Weston & Sampson

Weston & Sampson Engineers, Inc.
55 Walkers Brook Drive, Suite 100
Reading, MA 01867
978.532.1900 800.SAMPSON
www.westonandsampson.com

Consultants:

Revisions:

No.	Date	Description

COA:

Seal:

Issued For:

PERMITTING

Scale: AS NOTED

Date:	DECEMBER 2023
Drawn By:	GJK/RWS
Reviewed By:	SBR
Approved By:	TEM
W&S Project No.:	ENG23-0679
W&S File No.:	

Drawing Title:

ACCESS ROAD GRADING & DRAINAGE PLAN

Sheet Number:

C105

COPYRIGHT © 2022 WESTON & SAMPSON, INC.

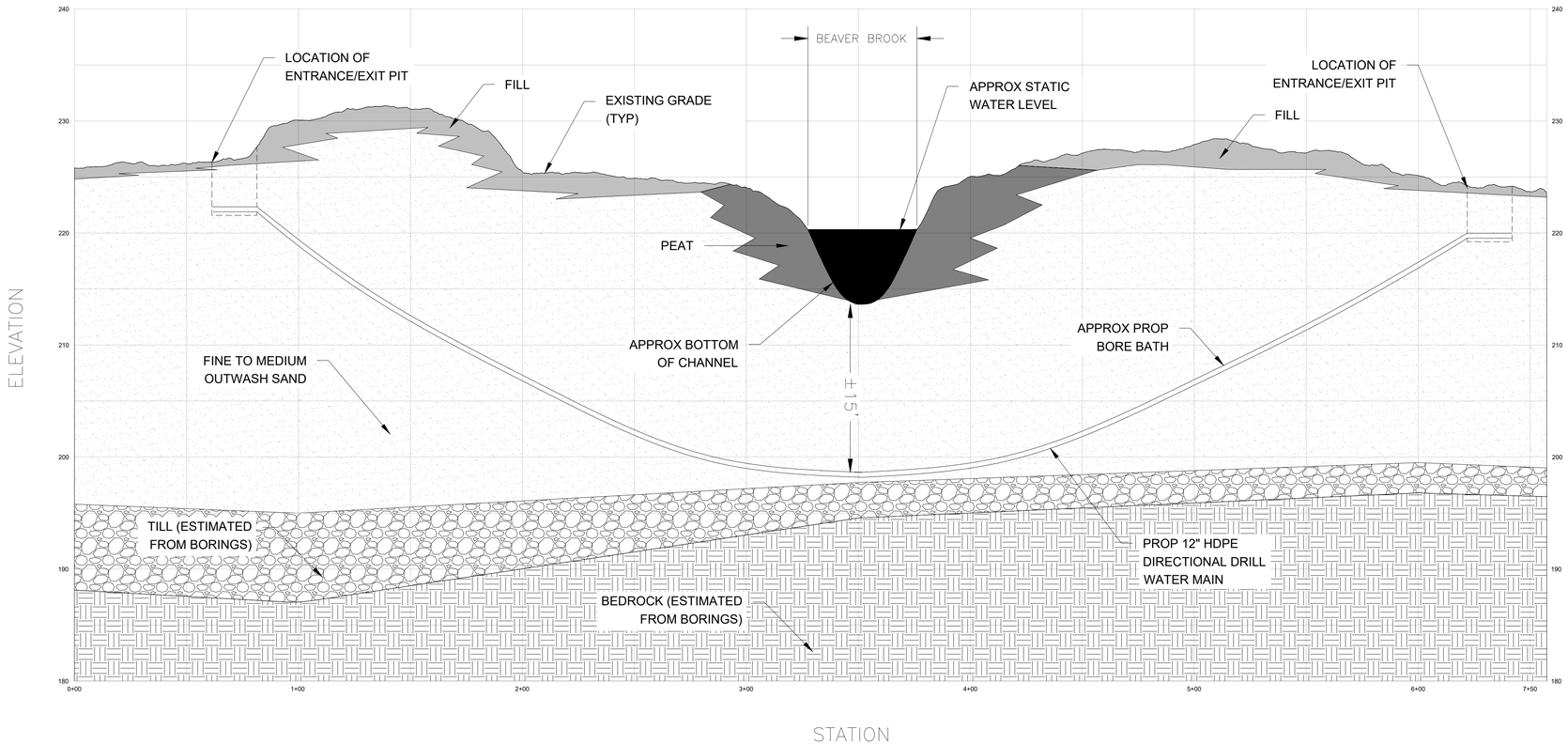

PROFILE

SCALE: 1"=30' HORIZ
1"=6' VERT

NOTES:

1. AT LEAST 30 DAYS PRIOR TO MOBILIZATION OF EQUIPMENT, THE CONTRACTOR SHALL SUBMIT A DETAILED INSTALLATION PLAN TO THE ENGINEER FOR REVIEW. INFORMATION SHALL INCLUDE THE FOLLOWING:

- A DETAILED PLAN AND PROFILE OF THE BORE PLOTTED AT A SCALE NO SMALLER THAN 1-IN EQUALS 20-FT (H) AND 1-IN EQUALS 2-FT (V).
- LOCATIONS OF ENTRY AND EXIT PITS.
- THE PLOTTED BORE PATH SHALL ENSURE THAT PIPE JOINTS DO NOT DEFLECT MORE THAN 50 PERCENT OF THE MANUFACTURER'S RECOMMENDED MAXIMUM DEFLECTION.
- MINIMUM PIPE WALL THICKNESS SHALL BE BASED ON A DR OF 11. CONTRACTOR AND PIPE MANUFACTURER SHALL MUTUALLY DETERMINE ACTUAL WALL THICKNESS REQUIRED, BASED ON STATIC AND DYNAMIC LOADS.
- CALCULATIONS OF STRESSES AND LONGITUDINAL STRAINS DEVELOPED IN PIPE DURING HANDLING AND INSTALLATION.

2. ALL NEW DUCTILE IRON WATER MAIN SHALL RECEIVE POLYETHYLENE ENCASEMENT.

Project:
LITTLETON WATER DEPARTMENT

LITTLETON LELWD ELECTRIC LIGHT & WATER DEPARTMENTS

TAYLOR STREET WELL AND RAW WATER MAIN
TOWN CONTRACT NO. IFB-2024
DWSRF NO. 12397
CONTRACT NO.1

Weston & Sampson
Weston & Sampson Engineers, Inc.
55 Walkers Brook Drive, Suite 100
Reading, MA 01867
978.532.1900 800.SAMPSON
www.westonandsampson.com

Consultants:

Revisions:

No.	Date	Description

COA:

Seal:

Issued For:
PERMITTING

Scale: AS NOTED

Date:	DECEMBER 2023
Drawn By:	GJK
Reviewed By:	SBR
Approved By:	TEM
W&S Project No.:	ENG23-0679
W&S File No.:	

Drawing Title:
BEAVER BROOK DIRECTIONAL DRILL

Sheet Number:
C201

COPYRIGHT © 2022 WESTON & SAMPSON, INC.

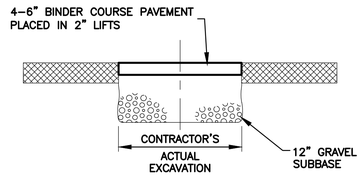

TEMPORARY TRENCH PAVEMENT

N.T.S.

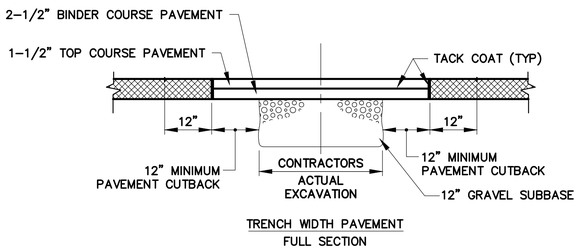

PERMANENT PAVEMENT REPLACEMENT DETAIL

N.T.S.

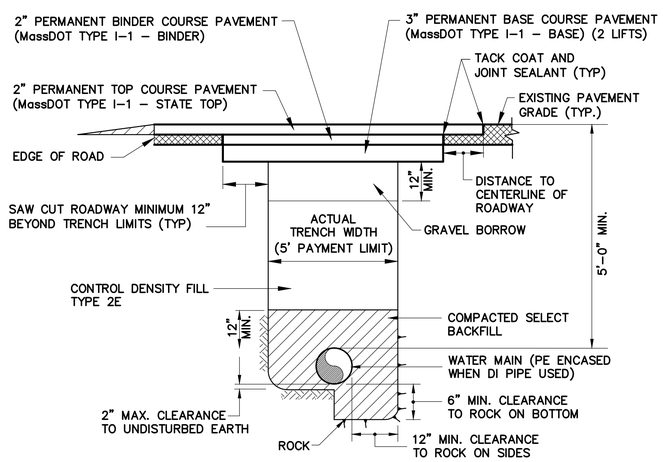

TYPE 3 AND TYPE 4
MASSACHUSETTS DEPARTMENT OF TRANSPORTATION (MassDOT) PERMANENT TRENCH PAVEMENT AND WATER MAIN TRENCH

N.T.S.

NOTES:

1. SEE SECTION 32 11 00, PAVING FOR PAVEMENT SCHEDULE.
2. FOR ALL TRENCH PAVEMENTS, CONTRACTOR SHALL INSTALL ASPHALT EMULSION TACK COAT TO ALL SUBSURFACES AND VERTICAL SAW CUTS PRIOR TO INSTALLATION OF PERMANENT PAVEMENT.
3. PAVEMENT SHALL BE INSTALLED FLUSH WITH EXISTING GRADE BEFORE WINTER SHUTDOWN.
4. TOP LAYER OF PAVEMENT SHALL BE INSTALLED BY MECHANICAL MEANS.

PAVEMENT REPLACEMENT DETAILS

N.T.S.

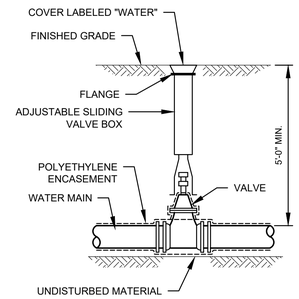

VALVE AND BOX DETAIL

N.T.S.

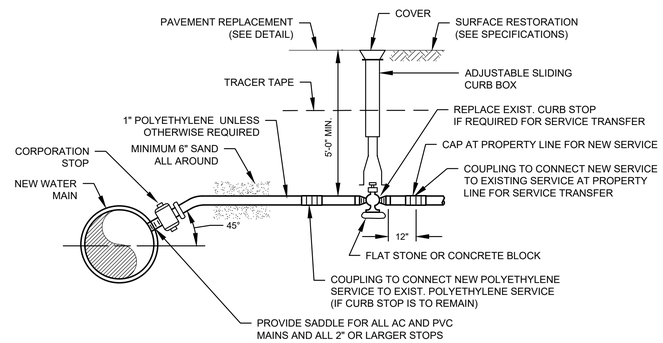

WATER SERVICE DETAIL

N.T.S.

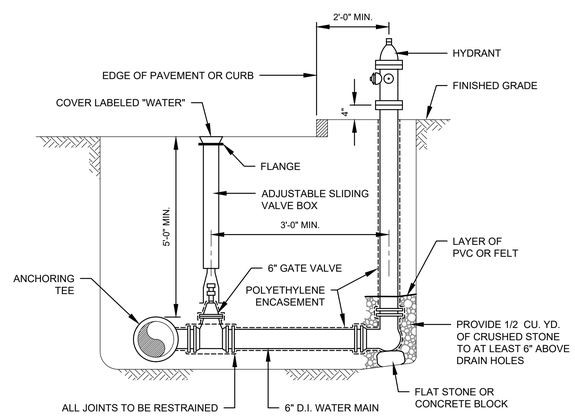

NOTE:

USE TWO 6" BENDS OR OFFSET ON LATERAL TO ACHIEVE REQUIRED HYDRANT ELEVATION IF NECESSARY.

HYDRANT AND VALVE DETAIL

N.T.S.

REQUIRED LENGTH OF RESTRAINED JOINTS FROM FITTINGS (FEET)

PIPE SIZE	90° BEND	45° BEND OR WYE BRANCH	22 1/2° BEND	11 1/4° BEND	PLUG, CAP OR IN-LINE VALVE	TEE (BRANCH)
6"	25 (30.5)	10.5 (12.5)	5 (6)	2.5 (3)	43 (64)	34 (51)
8"	33 (40)	13.5 (16.5)	6.5 (8)	3 (4)	55 (82)	47 (70)
10"	40 (48.5)	16.5 (20)	8 (9.5)	4 (5)	67 (100)	58 (87)
12"	47 (56.5)	19.5 (23.5)	9.5 (11.5)	4.5 (5.5)	79 (118)	70 (105)
16"	59.5 (72)	24.5 (30)	12 (14.5)	6 (7)	101 (152)	92 (139)
20"	72 (86.5)	30 (36)	14.5 (17)	7 (8.5)	123 (184)	114 (171)
24"	84 (100)	35 (41)	16.5 (20)	8 (10)	144 (216)	134 (202)
30"	100 (120)	41 (50)	20 (24)	10 (12)	174 (261)	165 (247)

NOTES:

1. RESTRAINED LENGTHS LISTED IN PARENTHESES ARE FOR PIPE WRAPPED IN POLYETHYLENE. THE OTHER ASSOCIATED LENGTHS ARE FOR PLAIN UNWRAPPED DUCTILE IRON PIPE.
2. THE CONTRACTOR SHALL USE THIS TABLE IN CONJUNCTION WITH THE APPROPRIATE PIPE SPECIFICATION SECTION.

RESTRAINED JOINT TABLE

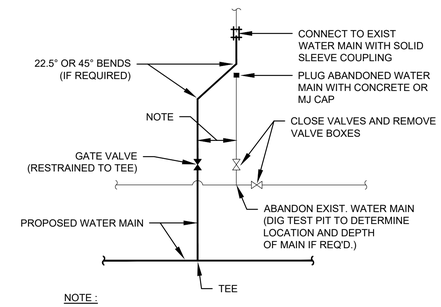

NOTE :

MINIMUM PRACTICAL DISTANCE - GENERALLY NO MORE THAN 2 FT.

WATER MAIN LATERAL CONNECTION

N.T.S.

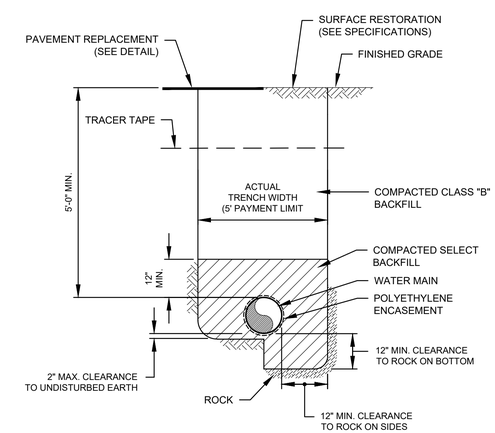

WATER MAIN TRENCH DETAIL

N.T.S.

Project:

LITTLETON WATER DEPARTMENT

LITTLETON LELWD ELECTRIC LIGHT & WATER DEPARTMENTS

TAYLOR STREET WELL AND RAW WATER MAIN
TOWN CONTRACT NO. IFB-2024
DWSRF NO. 12397
CONTRACT NO.1

Weston & Sampson

Weston & Sampson Engineers, Inc.
55 Walkers Brook Drive, Suite 100
Reading, MA 01867
978.532.1900 800.SAMPSON
www.westonandsampson.com

Consultants:

Revisions:

No.	Date	Description

COA:

Seal:

Issued For:

PERMITTING

Scale: AS NOTED

Date:	DECEMBER 2023
Drawn By:	GJK/RWS
Reviewed By:	SBR
Approved By:	TEM
W&S Project No.:	ENG23-0679
W&S File No.:	

Drawing Title:

DETAILS I

Sheet Number:

C501

COPYRIGHT © 2022 WESTON & SAMPSON, INC.

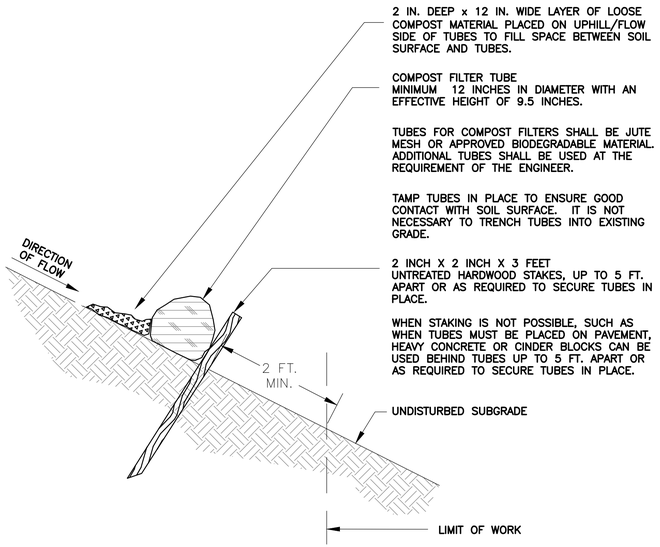

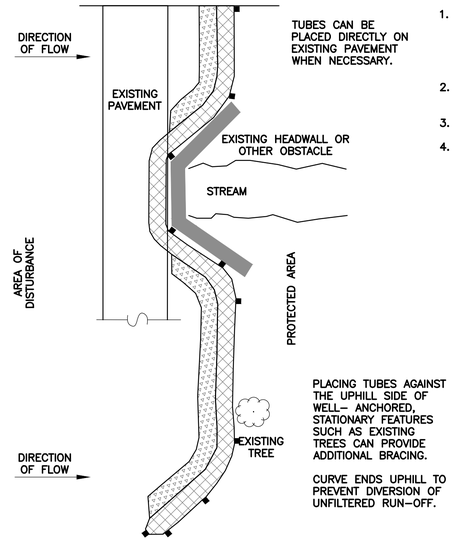

PLAN VIEW

GENERAL NOTES:

1. PROVIDE A MINIMUM TUBE DIAMETER OF 12 INCHES FOR SLOPES UP TO 50 FEET IN LENGTH WITH A SLOPE RATIO OF 3H:1V OR STEEPER. LONGER SLOPES OF 3H:1V MAY REQUIRE LARGER TUBE DIAMETER OR ADDITIONAL COURSING OF FILTER TUBES TO CREATE A FILTER BERM. REFER TO MANUFACTURER'S RECOMMENDATIONS FOR SITUATIONS WITH LONGER OR STEEPER SLOPES.
2. INSTALL TUBES ALONG CONTOURS AND PERPENDICULAR TO SHEET OR CONCENTRATED FLOW.
3. DO NOT INSTALL IN PERENNIAL, EPHEMERAL OR INTERMITTENT STREAMS.
4. CONFIGURE TUBES AROUND EXISTING SITE FEATURES TO MINIMIZE SITE DISTURBANCE AND MAXIMIZE CAPTURE AREA OF STORMWATER RUN–OFF.

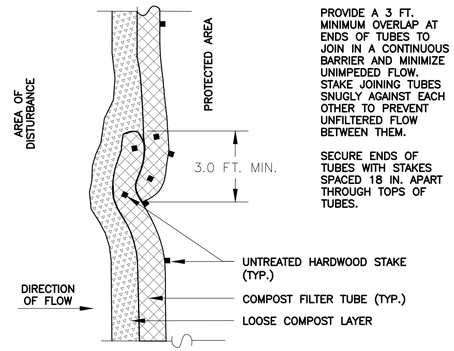

PLAN VIEW – JOIN DETAIL

SINGLE COMPOST FILTER TUBE DETAIL

NOT TO SCALE

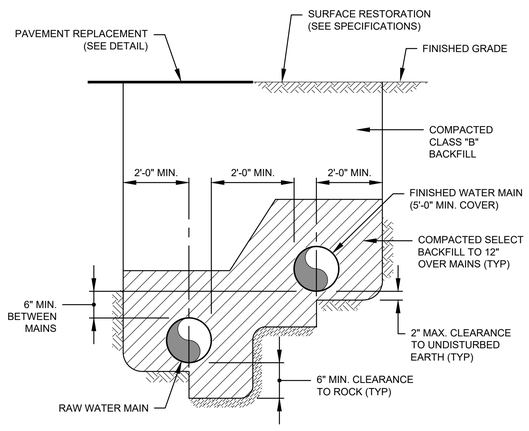

DUAL WATER MAIN TRENCH DETAIL

N.T.S.

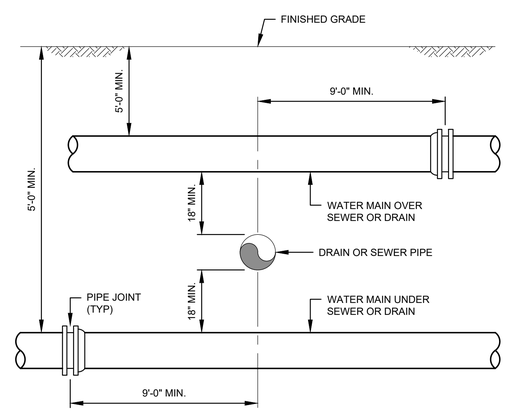

SEWER OR DRAIN CROSSING DETAIL

N.T.S.

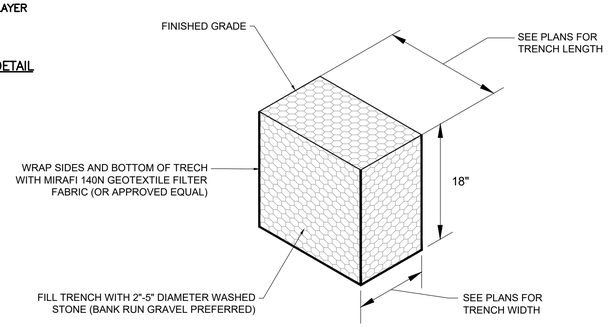

STORMWATER INFILTRATION TRENCH

N.T.S.

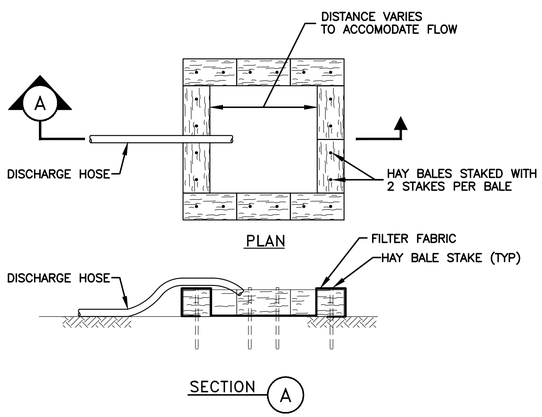

DEWATERING DISCHARGE DISPOSAL DETAIL

N.T.S.

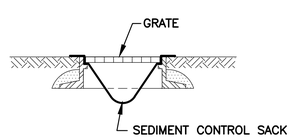

CATCH BASIN PROTECTION DETAIL

N.T.S.

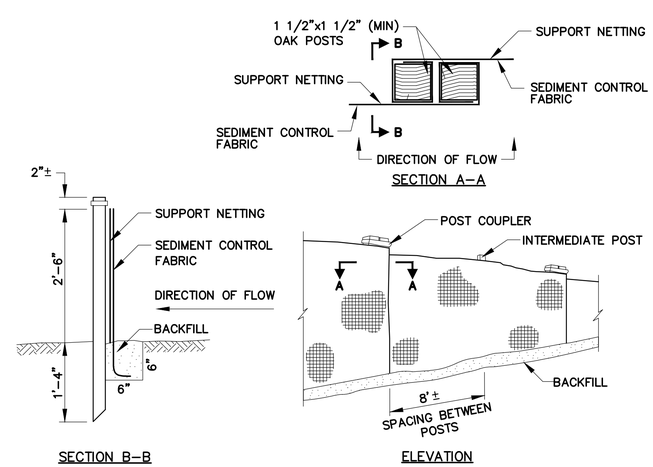

SILT FENCE DETAIL

N.T.S.

Project:

LITTLETON WATER DEPARTMENT

LITTLETON LELWD ELECTRIC LIGHT & WATER DEPARTMENTS

TAYLOR STREET WELL AND RAW WATER MAIN
TOWN CONTRACT NO. IFB-2024
DWSRF NO. 12397
CONTRACT NO.1

Weston & Sampson

Weston & Sampson Engineers, Inc.
55 Walkers Brook Drive, Suite 100
Reading, MA 01867
978.532.1900 800.SAMPSON
www.westonandsampson.com

Consultants:

Revisions:

No.	Date	Description

COA:

Seal:

Issued For:

PERMITTING

Scale: AS NOTED

Date:	DECEMBER 2023
Drawn By:	GJK/RWS
Reviewed By:	SBR
Approved By:	TEM
W&S Project No.:	ENG23-0679
W&S File No.:	

Drawing Title:

DETAILS II

Sheet Number:

C502

COPYRIGHT © 2022 WESTON & SAMPSON, INC.

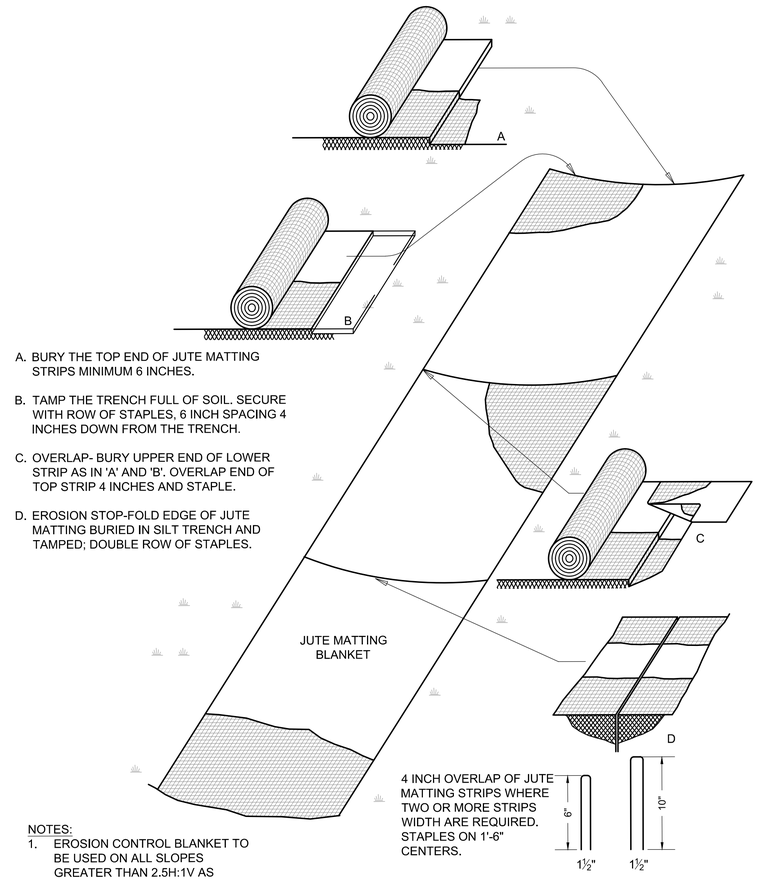

A. BURY THE TOP END OF JUTE MATTING STRIPS MINIMUM 6 INCHES.

B. TAMP THE TRENCH FULL OF SOIL. SECURE WITH ROW OF STAPLES, 6 INCH SPACING 4 INCHES DOWN FROM THE TRENCH.

C. OVERLAP- BURY UPPER END OF LOWER STRIP AS IN 'A' AND 'B'. OVERLAP END OF TOP STRIP 4 INCHES AND STAPLE.

D. EROSION STOP-FOLD EDGE OF JUTE MATTING BURIED IN SILT TRENCH AND TAMPED; DOUBLE ROW OF STAPLES.

NOTES:
1. EROSION CONTROL BLANKET TO BE USED ON ALL SLOPES GREATER THAN 2.5H:1V AS INDICATED ON GRADING PLANS.
2. EROSION CONTROL BLANKET TO BE PRODUCED FROM BIODEGRADABLE JUTE OR COIR MATTING AND IS NOT TO CONTAIN PLASTICS.

EROSION CONTROL BLANKET DETAIL
N.T.S.

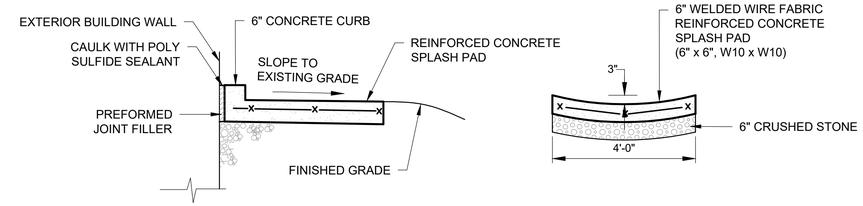

REINFORCED CONCRETE SPLASH PAD DETAIL
N.T.S.

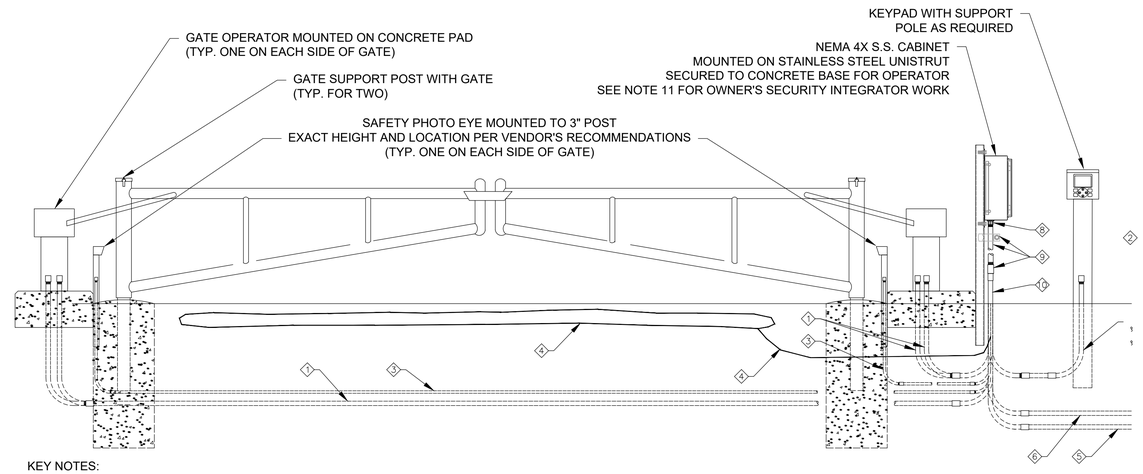

KEY NOTES:

1. (1) 1" U.G. CONDUIT WITH 3#10, 1#10G AND (1) 1" U.G. CONDUIT WITH VENDOR CONTROL CABLES FROM GATE OPERATOR TO NEMA 4X CABINET W/ GATE CONTROLLER.
2. (1) 1" U.G. CONDUIT WITH VENDOR CONTROL CABLE FROM KEYPAD TO NEMA 4X CABINET W/ GATE CONTROLLER, AS REQUIRED.
3. (1) 3/4" U.G. CONDUIT WITH 4#14 FROM SAFETY PHOTO EYE TO NEMA 4X CABINET W/ GATE CONTROLLER.
4. (1) MAGNETIC LOOP DETECTOR CABLE IMBEDDED UNDER PAVEMENT IN THREE (3) LOCATIONS TO NEMA 4X CABINET W/ GATE CONTROLLER.
5. (1) 1 1/2" U.G. FEEDER CONDUIT WITH 3#6, 1#8G FROM MAIN CONTROL PANEL (RTU-TW) INSIDE WELL #6 BUILDING. SEE SITE PLANS FOR ROUTING. FURNISHED AND INSTALLED BY CONTRACTOR. STUB UP AND CAP 12" ABOVE GROUND FOR GATE VENDOR CONNECTION.
6. (1) 1 1/2" U.G. SIGNAL CONDUIT WITH FIBER OPTIC CABLE FROM FIBER OPTIC PATCH PANEL INSIDE WELL #6 BUILDING. SEE SITE PLAN FOR ROUTING. FURNISHED AND INSTALLED BY CONTRACTOR. STUB UP AND CAP 12" ABOVE GROUND FOR GATE VENDOR CONNECTION.
7. CONTRACTOR TO CAREFULLY COORDINATE EXACT LOCATION OF ALL GATE EQUIPMENT WITH OWNER AND ENGINEER IN FIELD PRIOR TO INSTALLATION. REFER TO SPECIFICATIONS FOR EXACT WIRING PER GATE VENDER'S REQUIREMENTS.
8. PROVIDE MYERS TYPE THREADED GASKETED CONDUIT HUBS INTO BOXES/ENCLOSURES AS REQUIRED (TYP.)
9. RGS SLIP FITTING, RGS CONDUIT ABOVE TO CABINET WITH S.S. UNISTRUT CLIPS (TYP.)
10. PVC COATED RGS CONDUIT 12" ABOVE GROUND (TYP.)
11. COORDINATE WITH OWNER'S SECURITY INTEGRATOR. OWNER'S SECURITY INTEGRATOR WILL MOUNT GATE CONTROLLER AND FIBER OPTIC SWITCH INSIDE NEMA 4X S.S. CABINET.
12. EQUIPMENT & MATERIALS ARE FURNISHED AND INSTALLED BY GATE VENDOR UNLESS NOTED.

MOTOR OPERATED GATE DETAIL
N.T.S.

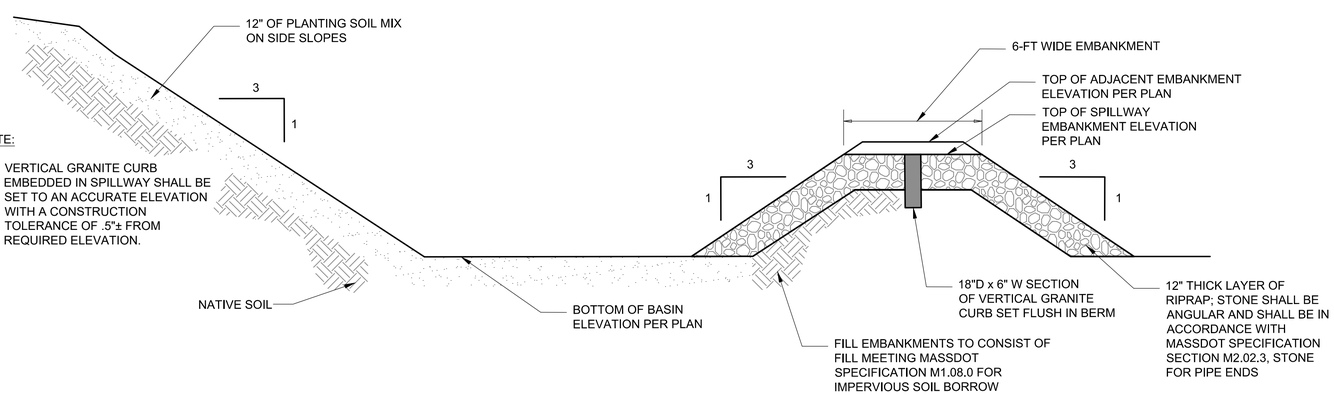

NOTE:

1. VERTICAL GRANITE CURB EMBEDDED IN SPILLWAY SHALL BE SET TO AN ACCURATE ELEVATION WITH A CONSTRUCTION TOLERANCE OF .5"± FROM REQUIRED ELEVATION.

INFILTRATION BASIN DETAIL
N.T.S.

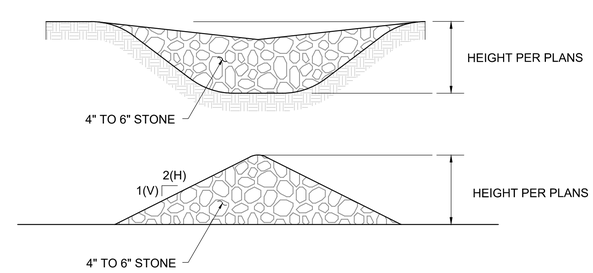

NOTE:

1. STRUCTURES SHALL BE INSTALLED ACCORDING TO THE DIMENSIONS SHOWN ON THE PLANS WHERE SEDIMENT FOREBAYS OR STONE CHECK DAMS ARE LOCATED.

SEDIMENT FOREBAY / STONE CHECKDAM DETAIL
N.T.S.

Project:
LITTLETON WATER DEPARTMENT
LITTLETON LELWD ELECTRIC LIGHT & WATER DEPARTMENTS
TAYLOR STREET WELL AND RAW WATER MAIN
TOWN CONTRACT NO. IFB-2024
DWSRF NO. 12397
CONTRACT NO.1

Weston & Sampson
Weston & Sampson Engineers, Inc.
55 Walkers Brook Drive, Suite 100
Reading, MA 01867
978.532.1900 800.SAMPSON
www.westonandsampson.com

Consultants:

Revisions:

No.	Date	Description

COA:

Seal:

Issued For:
PERMITTING

Scale: AS NOTED

Date:	DECEMBER 2023
Drawn By:	GJK/RWS
Reviewed By:	SBR
Approved By:	TEM
W&S Project No.:	ENG23-0679
W&S File No.:	

Drawing Title:
DETAILS III

Sheet Number:
C503

COPYRIGHT © 2022 WESTON & SAMPSON, INC.

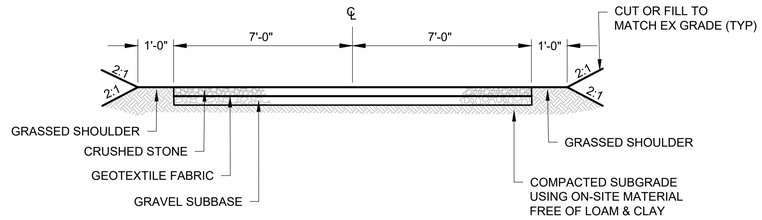

GRAVEL ROAD - TYPICAL SECTION 'A'

STA 0+00.00 - 0+05.00

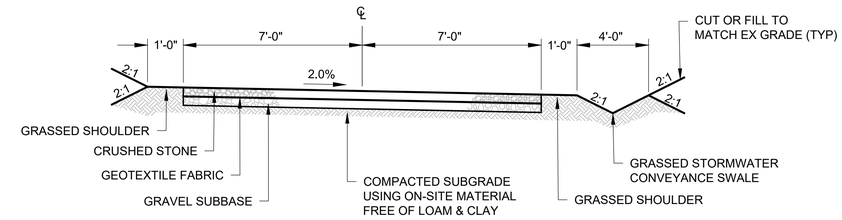

GRAVEL ROAD - TYPICAL SECTION 'B'

STA 0+05.00 - 6+90.36
STA 7+73.14 - 8+07.71

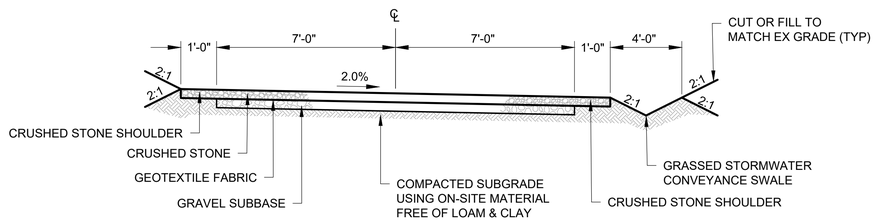

GRAVEL ROAD - TYPICAL SECTION 'C'

STA 6+90.36 - 7+73.14

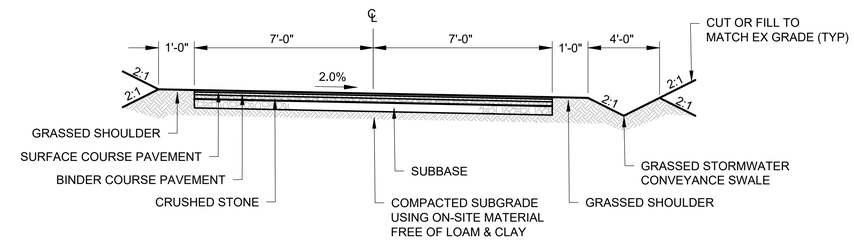

PAVED ROAD - TYPICAL SECTION 'D'

STA 8+07.71 - 9+97.25

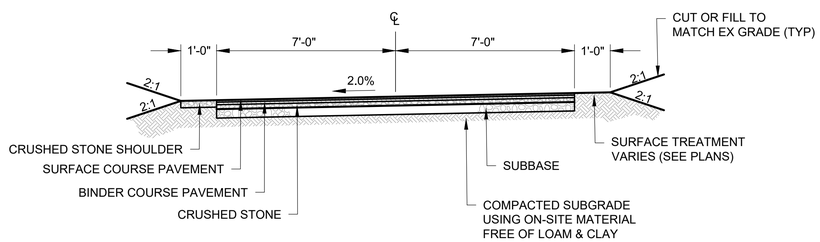

PAVED ROAD - TYPICAL SECTION 'E'

STA 9+97.25 - 11+96.61

NOTE:

1. SEE BITUMINOUS CONCRETE AND GRAVEL ACCESS ROADWAY CROSS-SECTIONS FOR INFORMATION ON MATERIAL DEPTHS AND ADDITIONAL REQUIREMENTS.

ACCESS ROADWAY CROSS-SECTIONS

N.T.S.

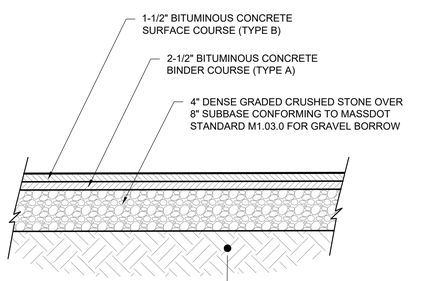

NOTE:

1. SEE HOT MIX ASPHALT SPECIFICATIONS (SECTION 32 12 00) FOR PAVING MATERIAL REQUIREMENTS.

SECTION VIEW

BITUMINOUS CONCRETE ACCESS ROADWAY CROSS-SECTION

N.T.S.

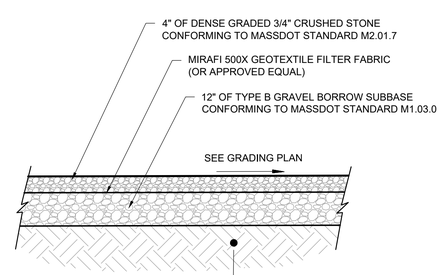

NOTE:

1. SEE GRAVEL SURFACE SPECIFICATIONS (SECTION 32 11 23) FOR MATERIAL REQUIREMENTS.

SECTION VIEW

GRAVEL ACCESS ROADWAY CROSS-SECTION

N.T.S.

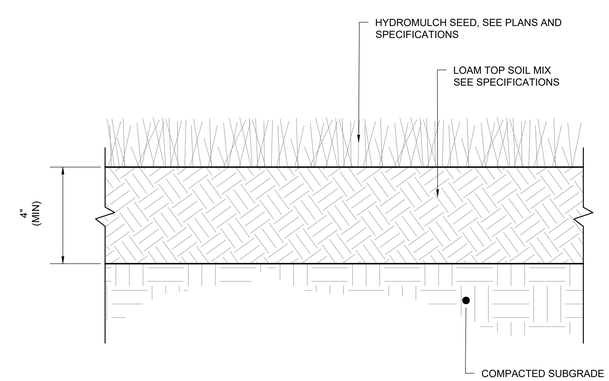

LOAM & SEED DETAIL

N.T.S.

Project:

LITTLETON WATER DEPARTMENT

LITTLETON LELWD ELECTRIC LIGHT & WATER DEPARTMENTS

TAYLOR STREET WELL AND
RAW WATER MAIN
TOWN CONTRACT NO. IFB-2024
DWSRF NO. 12397
CONTRACT NO.1

Weston & Sampson

Weston & Sampson Engineers, Inc.
55 Walkers Brook Drive, Suite 100
Reading, MA 01867
978.532.1900 800.SAMPSON
www.westonandsampson.com

Consultants:

Revisions:

No.	Date	Description

COA:

Seal:

Issued For:

PERMITTING

Scale: AS NOTED

Date:	DECEMBER 2023
Drawn By:	GJK/RWS
Reviewed By:	SBR
Approved By:	TEM
W&S Project No.:	ENG23-0679
W&S File No.:	

Drawing Title:

DETAILS IV

Sheet Number:

C504

COPYRIGHT © 2022 WESTON & SAMPSON, INC.